Under the auspices of
The League of Arab State

Guideline on good pharmacovigilance practices (GVP)

For Arab Countries

Guideline
On Good Pharmacovigilance Practice
For Arab Countries

For Medicinal Products for Human Use

-Guideline for Marketing Authorization Holders-

1st Published: March 2014
1st Effective: 1st July 2015

Version 3 - December 2015

Versions change control

Version No.	Version date	Change section	Changes	Effective date *for changes*
1	**3/2014**	-------		-------
2	**12/2014**	**The Whole document** – Change in page numbering due to spacing & margin formatting – Editorial improvements without impact on the content		1/7/2015
		– Contributors	Editorial improvements	
		– Structure of GVP	Clarification about timelines	
		Module I		
		– I.B.12. Monitoring the performance & effectiveness of PV system and its quality system	Addition of minor missing text	
		Module II		
		– II.B.4.1. PSMF section on QPPV – II.C.3.2.1. National PSSF section on LSR	Provide more illustration on how to fill the table	
		– II.B.6. PSMF presentation – II.C.2. Accessibility/ submission of PMSF – II.C.3.3. National PSSF presentation – II.C.3.5.2. Post -authorisation	Correction of timeline	
		Module V		
		– Editorial improvements throughout the Module without impact on its content		
		– V.B.1. Terminology	Amended definition of Risk minimisation activity	
		– V.B.1. Terminology – V.B.8.9. RMP module SVIII "Summary of the safety concerns"	Amended definition of Missing information & safety concern	
		– V.B.9.4. RMP part III section table of additional pharmacovigilance activities" – V.C.3.1. Requirements in specific situations	Simplification of requirements	

Version No.	Version date	Change section	Changes	Effective date *for changes*
		– V.B.12. (& its sub-sections) RMP part VI "Summary of activities in the RMP by medicinal product"	Amended sub-section of the RMP part VI	
		– V.C.3. Situations when a risk management plan should be submitted	New situations added	
		– V.C.4. and V.C.5.	Regarding the updates of RMP & their submission	
		Module X		
		– X.C.2.1. Mandatory Scope	Date correction	
		Module XI , Module XII, Module XIV, P I, P II – Change in the expected release date		
		– Module XVI- Risk minimization measures: selection of tools and effectiveness indicators	Newly added Module	
		– **Annex I definitions**	Amendments of definitions of **Missing information** (including its explanatory note) and **Risk minimisation activity** in accordance with update of Module V	
		Annex II templates		
		– Annex II.1. Template of the Risk Management Plan (RMP) in integrated format	Simplification of Part III.4 & Part VI	
		– Annex II.2. Template of the Risk Management Plan (RMP) for Generics	Simplification of Part III.4 & Part VI	
		– Annex II.3. Template of the National Display of the Risk Management Plan (RMP) in the Arab Countries - for MAH/Applicant having Eu RMP	Editorial improvements	
3	12/2015	– Editorial improvements without impact on the content	Editorial improvements	01/2016
		– Contributors	Addition of contributors	
		Module II		
		– II.C.2. Accessibility/ submission of the pharmacovigilance system master file	Clarification for SOPs submission	

Version No.	Version date	Change section	Changes	Effective date *for changes*
		– II.B.4.1. PSMF section on QPPV – II.C.3.2.1. National PSSF section on LSR	More details provided	
		– Table II.1 Conditions to submit the PSMF and the national PSSF	More clarification provided	
		Module XI , Module XII, Module XIV, P II Change in the expected release date		
		– **P.I: Vaccines for prophylaxis against infectious diseases**	Newly added part	
		– **Annex II.2. Template of the Risk Management Plan (RMP) for Generics**	Clarification provided in part III & part IV regarding the situations when these parts are needed	
		– **Annex III Other Pharmacovigilance guidance**	Addition of new guidance & amendments of some links	
		– **Annex IV ICH guidelines for Pharmacovigilance**	Amendments of some links	

Preface

Pharmacovigilance has been defined by the World Health Organization as the science and activities relating to the detection, assessment, understanding and prevention of adverse effects or any other medicine-related problem. This Guideline of the Arab Countries has been developed to bring guidance on the requirements, procedures, roles and activities in the field of human Pharmacovigilance, for Marketing Authorization Holders (MAHs) of medicinal products for human use in the Arab Countries.

This guidance describes the respective obligations of the MAH to set up a system for Pharmacovigilance in order to collect, collate and evaluate information about suspected adverse reactions. All relevant information should be shared between medicines authority in Arab Countries and the MAH, in order to allow all parties involved in pharmacovigilance activities to assume their obligations and responsibilities.

The ultimate goal is to ensure that the MAHs are fulfilling their principal role in the safety monitoring of their medical products for human use, hence enhance efforts in ensuring that safe, efficacious, and quality medicines are made available for all patients in the Arab Countries.

With the strategic objectives "to not reinvent the wheel" and "to keep up –moreover- harmonise with the new development in pharmacovigilance practices & regulations"; this guideline is greatly adopted from the European Good Pharmacovigilance Practices (EU GVP) which considered the most compatible ICH pharmacovigilance guideline thus the most widely applied pharmacovigilance practices in the developed European Countries.

The adoption of the EU GVP as a base for this guideline does **NOT** undermine the right of a national medicines authority (NMA) in the Arab Countries to have additional or sometimes changed requirements. **Multinational marketing authorization holders should be attentive to these national requirements and bring the attention of their headquarters to them, consequently, take the necessary measure to comply**.

This "Good Pharmacovigilance Practice for Arab Countries" (GVP- Arab) has been made to "harmonise the pharmacovigilance practices & regulations in-between the Arab Countries", though, it is understood that Arab Countries may have different healthcare and regulatory systems especially with regard to pharmacovigilance. Accordingly, each national medicines authority in the Arab Countries should consider this guideline as an "ideal model" which they try to adopt as much as they can on their national level whether at the time being or planned for the near future.

Each national medicines authority in the Arab Countries needs to decide on the following, as applicable on the national level:

- The implementing regulations.
- The date this guideline become into effect.
- The Transitional arrangements for the implementation by NMA or MAHs. However, if needed, the transitional period to become into force may differ in-between GVP modules (i.e. PSUR, RMP …….etc.)
- If needed, any additional or changed requirements on the national level.

It should be noted that, as with all guidance documents in rapidly evolving technical areas, that this guidance is intended to be regularly reviewed and updated.

Contributors

In order to cope with these changes and to unify guidelines and performance across the Arab world, Arab ministers of health came to a common decree (number 7) in their 37th regular meeting in March 2012. Under the umbrella of the Arab League 'The Higher Technical Committee for Medicines' was established with representatives from all Arab countries, to create common Arab guidelines in pharmacovigilance, and in bioequivalence.

This committee elected Dr. Amr Saad, head of the Egyptian centre, to lead the committee across all its rounds. The committee has finished the final drafts of the two common guidelines which were submitted to the 38th regular ministers meeting, and which has been approved by them.

The new guidelines is mainly adapted from the newly-established international Good Pharmacovigilance Practice, composed of 16 different modules together with some product/population specific considerations, as well as annexes and templates of submission. The Guidelines were published in March 2014 and the effective date will be 1st July 2015.

It is expected that these guidelines will significantly influence pharmacovigilance practice in general in the whole Arab world, and will increase such activities including reporting rates and signal detection in that part of the world. It will also help some Arab countries to develop in the area of 'Regulatory Pharmacovigilance'.

The contributors from the National Medicines Authorities in the Arab Countries arranged in alphabetical order:

Country	Name
Egypt	Dr. Amr Saad
	Ph. Hadir Mamdouh Ahmed Rostom
Jordan	Ph. Nidaa Abd Al- Ghani Mohammad Bawaresh
Morocco	Prof. Rachida Soulaymani Bencheikh
	Dr. My Elhassan Elkarimi
Oman	Ph. Ahmed Saif Alharbi
Saudi Arabia	Dr. Adel A. Alharf
	Ph. Nasser Aljasser

Country	Name
	Ph. Fawaz F. Alharbi
	Ph. Yaser S. Alradyaan
Tunisia	Prof. Mohamed Lakhal
United Arab Emirates	Dr. Fatima Al Braiki

Table of Content

Versions change control **3**

Preface…….. ..... …**6**

Contributors….. ..... **8**

Table of Content **10**

Introductory note **28**

Objectives of Pharmacovigilance 28

Structure of GVP 28

Format & layout general requirements 29

GVP: Modules **30**

Module I– Pharmacovigilance systems and their quality systems **30**

I.A Introduction 31

I.B. Structures and processes 31

I.B.1. Pharmacovigilance system 31

I.B.2. Quality, quality objectives, quality requirements and quality system 31

I.B.3. Quality cycle 32

I.B.4. Overall quality objectives for pharmacovigilance 32

I.B.5. Principles for good pharmacovigilance practices 32

I.B.6. Responsibilities for the quality system within an organization 33

I.B.7. Training of personnel for pharmacovigilance 34

I.B.8. Facilities and equipment for pharmacovigilance 35

I.B.9. Specific quality system procedures and processes 35

I.B.9.1. Compliance management by marketing authorisation holders 35

I.B.9.2. Compliance management by national medicines authorities 36

I.B.10. Record management 36

I.B.11. Documentation of the quality system 37

I.B.11.1. Additional quality system documentation by marketing authorisation holders 38

I.B.11.2. Critical pharmacovigilance processes and business continuity 38

I.B.12. Monitoring of the performance and effectiveness of the pharmacovigilance system and its quality system 39

I.B.13. Preparedness planning for pharmacovigilance in public health emergencies 40

I.C. Operation of Pharmacovigilance systems in Arab Countries 41

I.C.1. Overall pharmacovigilance responsibilities of the applicant and marketing authorisation holder in the Arab Countries 41
I.C.1.1. Responsibilities of the marketing authorisation holder in relation to the qualified person responsible for pharmacovigilance in the Arab Country concerned 41
I.C.1.2. Qualifications of the qualified person responsible for pharmacovigilance in the Arab Country concerned 43
I.C.1.3. Role of the qualified person responsible for pharmacovigilance in the Arab Country concerned 44
I.C.1.4. Specific quality system processes of the marketing authorisation holder in the Arab Country concerned 46
I.C.1.5. Quality system requirements for pharmacovigilance tasks subcontracted by the marketing authorisation holder 47
I.C.2. Overall pharmacovigilance responsibilities within each of the Arab Countries 47
I.C.2.1. Role of the national medicines authorities 48
I.C.2.2. Role of the national Pharmacovigilance Advisory Committee 48
I.C.2.3. Specific quality system processes of the quality systems of medicines authorities in Arab Countries 48
I.C.3. Preparedness planning in the Arab Countries for pharmacovigilance in public health emergencies ..49
Module II- Pharmacovigilance system master file 50
II.A. Introduction 51
II.B. Structures and processes 51
II.B.1. Objectives 51
II.B.2. Registration and maintenance 52
II.B.2.1. Summary of the applicant's pharmacovigilance system 52
II.B.2.2. Location 53
II.B.2.3. Registration 53
II.B.2.4. Transfers of responsibilities for the PSMF 54
II.B.3. The representation of pharmacovigilance systems 54
II.B.4. Information to be contained in the PSMF 56
II.B.4.1. PSMF section on qualified person responsible for pharmacovigilance (QPPV) 56
II.B.4.2. PSMF section on the organisational structure of the marketing authorisation holder 58
II.B.4.3. PSMF section on the sources of safety data 59
II.B.4.4. PSMF section on computerised systems and databases 60
II.B.4.5. PSMF section on pharmacovigilance processes 60
II.B.4.6. PSMF section on pharmacovigilance system performance 61
II.B.4.7. PSMF section on quality system 62
II.B.4.8. Annex to the PSMF 64
II.B.5 Change control, logbook, versions and archiving 65
II.B.6. Pharmacovigilance system master file presentation 66

II.B.6.1. Format and layout 66
II.C. Operation in the Arab Countries 68
II.C.1. Responsibilities....68
II.C.1.1. Marketing authorisation holders and applicants....68
II.C.1.2. National medicines authorities....69
II.C.2. Accessibility/ submission of the pharmacovigilance system master file....69
II.C.3. Special considerations for the multinational MAHs/applicants 70
II.C.3.1. The PSMF general consideration....71
II.C.3.2. The information to be contained in the national PSSF....71
II.C.3.2.1. National PSSF section on "local safety responsible (LSR)" 71
II.C.3.2.2. National PSSF section on the "organisational structure of the MAH's local office" .73
II.C.3.2.3. National PSSF section on the "sources of safety data"....74
II.C.3.2.4. National PSSF section on "computerised systems and databases"....74
II.C.3.2.5. National PSSF section on "pharmacovigilance processes"....75
II.C.3.2.6. National PSSF section on "pharmacovigilance sub-system performance"....77
II.C.3.2.7. National PSSF section on "quality system" 77
II.C.3.2.8. Annex to the national PSSF 79
II.C.3.3. National PSSF presentation....80
II.C.3.3.1. Format and layout 80
II.C.3.4. Summary of the applicant's national pharmacovigilance sub-system 82
II.C.3.5. Submission of multinational MAH's PSMF and national PSSF 83
II.C.3.5.1. In the marketing authorization application: 83
II.C.3.5.2. Post -authorisation: 84
Module III – Pharmacovigilance inspections 85
III.A. Introduction 86
III.B. Structures and processes 87
III.B.1. Inspection types....87
III.B.1.1. System and product-related inspections....87
III.B.1.2. Routine and "for cause" pharmacovigilance inspections....87
III.B.1.3. Pre-authorisation inspections....88
III.B.1.4. Post-authorisation inspections 89
III.B.1.5. Announced and unannounced inspections....89
III.B.1.6. Re-inspections....90
III.B.1.7. Remote inspections....90
III.B.2. Inspection planning 90
III.B.3. Sites to be inspected....92
III.B.4. Inspection scope....92

III.B.4.1. Routine pharmacovigilance inspections 92
III.B.4.2. For cause inspections 94
III.B.4.3. Re-inspections 94
III.B.5. Inspection process 95
III.B.6. Inspection follow-up 96
III.B.7. Regulatory actions and sanctions 96
III.B.8. Record management and archiving 97
III.B.9. Qualification and training of inspectors 97
III.B.10. Quality management of pharmacovigilance inspection process 98
III.C. Operation of pharmacovigilance inspections in Arab Countries 98
III.C.1.Role of the national medicines authorities 98
III.C.1.1. Inspection Programs 99
III.C.1.2. Cooperation and Sharing of information 99
III.C.2. Role of the Marketing Authorisation Holders and Applicants 100
III.C.3. Inspection Fees 100
Module IV – Pharmacovigilance audits 101
IV.A. Introduction 102
IV.A.1. Terminology 102
IV.B. Structures and processes 104
IV.B.1. Pharmacovigilance audit and its objective 104
IV.B.2. The risk-based approach to pharmacovigilance audits 104
IV.B.2.1.Strategic level audit planning 105
IV.B.2.2. Tactical level audit planning 106
IV.B.2.3. Operational level audit planning and reporting 107
IV.B.2.3.1. Planning and fieldwork 107
IV.B.2.3.2. Reporting 107
IV.B.2.4. Actions based on audit outcomes and follow-up of audits 108
IV.B.3. Quality system and record management practices 108
IV.B.3.1. Competence of auditors and quality management of audit activities 108
IV.B.3.1.1. Independence and objectivity of audit work and auditors 108
IV.B.3.1.2. Qualifications, skills and experience of auditors and continuing professional development 109
IV.B.3.1.3. Evaluation of the quality of audit activities 109
IV.B.3.2. Audits undertaken by outsourced audit service providers 109
IV.B.3.3. Retention of audit reports 109
IV.C. Operation in the Arab Countries: Pharmacovigilance audit policy framework 110
IV.C.1. Requirement to perform an audit for Marketing authorisation holders in the Arab Countries 110

IV.C.1.1. The qualified person responsible for pharmacovigilance (QPPV)/LSR 110
IV.C.2. Requirements for audit reporting by the marketing authorisation holder in the Arab Countries 110
IV.C.3. Confidentiality 111
Module V – Risk Management Systems (Rev 1) 112
V.A. Introduction 113
V.B. Structures and processes 114
V.B.1. Terminology 114
V.B.2. Principles of risk management 116
V.B.3. Responsibilities for risk management within an organisation 117
V.B.3.1. Marketing authorisation holders and applicants 117
V.B.3.2. Medicines authorities 118
V.B.4. Objectives of a risk management plan 119
V.B.5. Structure of the risk management plan 119
V.B.6. Detailed description of each part of the risk management plan 121
V.B.7. RMP part I "Product overview" 122
V.B.8. RMP part II "Safety specification" 123
V.B.8.1. RMP module SI "Epidemiology of the indications and target population" 124
V.B.8.2. RMP module SII "Non-clinical part of the safety specification" 125
V.B.8.3. RMP module SIII "Clinical trial exposure" 125
V.B.8.4. RMP module SIV "Populations not studied in clinical trials" 126
V.B.8.5. RMP module SV "Post-authorisation experience" 129
V.B.8.5.1. RMP module SV section "Action taken by regulatory authorities and/or marketing authorisation holders for safety reasons" 129
V.B.8.5.2. RMP module SV section "Non-study post-authorisation exposure" 129
V.B.8.5.3. RMP module SV section "Post-authorisation use in populations not studied in clinical trials" 130
V.B.8.5.4. RMP module SV section "Post-authorisation off-label use" 130
V.B.8.5.5. RMP module SV section "Epidemiological study exposure" 131
V.B.8.6. RMP module SVI "Additional requirements for the safety specification" 131
V.B.8.6.1. RMP module SVI section "Potential for harm from overdose" 131
V.B.8.6.2. RMP module SVI section "Potential for transmission of infectious agents" 131
V.B.8.6.3. RMP module SVI section "Potential for misuse for illegal purposes" 131
V.B.8.6.4. RMP module SVI section "Potential for medication errors" 132
V.B.8.6.5. RMP module SVI section "Potential for off-label use" 133
V.B.8.6.6. RMP module SVI section "Specific paediatric issues" 133
V.B.8.7. RMP module SVII "Identified and potential risks" 134
V.B.8.7.1. RMP module SVII section "Newly identified safety concerns" 134

V.B.8.7.2. RMP module SVII section "Recent study reports with implications for safety concerns" 134

V.B.8.7.3. RMP module SVII section "Details of important identified and potential risks from clinical development and post-authorisation experience" 134

V.B.8.7.4. RMP module SVII section "Identified and potential interactions including food-drug, drug-drug interactions and drug-herbal interactions".....136

V.B.8.7.5. RMP module SVII section "Pharmacological class effects" 137

V.B.8.8. RMP module SVII "Identified and potential risks (ATMP version)".....137

V.B.8.8.1. RMP module SVII section "Newly identified safety concerns (ATMP)".....137

V.B.8.8.2. RMP module SVII section "Recent study reports with implications for safety concerns (ATMP)".....137

V.B.8.8.3. RMP module SVII section "Details of important identified and potential risks (ATMP)" 137

V.B.8.9. RMP module SVIII "Summary of the safety concerns" 139

V.B.9. RMP Part III "Pharmacovigilance plan" 140

V.B.9.1. RMP part III section "Routine pharmacovigilance activities".....141

V.B.9.2. RMP part III section "Additional pharmacovigilance activities" 142

V.B.9.2.1. Particular situations with post authorisation safety studies.....144

V.B.9.3. RMP part III section "Action plans for safety concerns with additional pharmacovigilance requirements".....145

V.B.9.4. RMP part III section "Summary table of additional pharmacovigilance activities".....145

V.B.10. RMP part IV "Plans for post-authorisation efficacy studies" 147

V.B.10.1. RMP part IV section "Summary of existing efficacy data".....147

V.B.10.2 Tables of post-authorisation efficacy studies.....148

V.B.11. RMP Part V "Risk minimisation measures" 149

V.B.11.1. RMP part V section "Routine risk minimisation" 149

V.B.11.2. RMP part V section "Additional risk minimisation activities".....152

V.B.11.3. Format of risk minimisation plan(s).....153

V.B.11.4. RMP part V section "Evaluation of the effectiveness of risk minimisation activities" 153

V.B.11.5. RMP part V section "Summary of risk minimisation measures" 154

V.B.12. RMP part VI "Summary of activities in the risk management plan by medicinal product" 154

V.B.12.1. RMP part VI section "format and content of the summary of the RMP" 155

V.B.12.2. RMP part VI section "Summary of safety concerns" 155

V.B.12.3. RMP part VI section "Summary of risk minimisation measures by safety concern" ...156

V.B.12.4. RMP part VI section "Planned post-authorisation development plan".....156

V.B.12.5. RMP part VI section "Summary of changes to the risk management plan over time".157

V.B.13. RMP part VII "Annexes to the risk management".....157

V.B.14. The relationship between the risk management plan and the periodic safety update report 158

V.B.14.1. Common modules between periodic safety update report and risk management plan .159

V.B.15. Principles for assessment of risk management plans 159

V.B.16. Quality systems and record management 161
V.C. Operation of risk management in Arab Countries 161
V.C.1. Legal basis for the implementation of risk management within the Arab Countries 162
V.C.2. Risk management in the Arab Countries 162
V.C.3. Situations when a risk management plan should be submitted 162
V.C.3.1. Requirements in specific situations 163
V.C.4. Submission of the risk management plan 164
V.C.5. Updates to the risk management plan 165
V.C.5.1. Updates to the risk management plan submitted during a procedure 166
V.C.6. Procedure for the assessment of the risk management plan within the national medicines authority166
V.C.7. Implementation of additional risk minimisation activities 167
V.C.8. National Display of the RMP (country specific) - for MAH/Applicants having EU RMP in place 167
Module VI –Management and reporting of adverse reactions to medicinal products 169
VI.A. Introduction 170
VI.A.1. Scope 170
VI.A.2. Definitions 170
VI.A.2.1. Adverse reaction 170
VI.A.2.1.1. Causality 170
VI.A.2.1.2. Overdose, off-label use, misuse, abuse, occupational exposure 171
VI.A.2.2. Medicinal product 171
VI.A.2.3. Primary source 172
VI.A.2.4 Seriousness 172
VI.A.2.5. Individual Case Safety Report (ICSR) 173
VI.B. Structures and Processes 173
VI.B.1. Collection of reports 173
VI.B.1.1. Unsolicited reports 174
VI.B.1.1.1. Spontaneous reports 174
VI.B.1.1.2. Literature reports 174
VI.B.1.1.3. Reports from other sources 175
VI.B.1.1.4. Information on suspected adverse reactions from the internet or digital media 175
VI.B.1.2. Solicited reports 176
VI.B.2. Validation of reports 176
VI.B.3. Follow-up of reports 178
VI.B.4. Data management 179
VI.B.5. Quality management 179

VI.B.6. Special situations 180
VI.B.6.1. Use of a medicinal product during pregnancy or breastfeeding 180
VI.B.6.2. Use of a medicinal product in a paediatric or elderly population 181
VI.B.6.3. Reports of overdose, abuse, off-label use, misuse, medication error or occupational exposure 181
VI.B.6.4. Lack of therapeutic efficacy 182
VI.B.7. Reporting of ICSRs 182
VI.B.7.1. Reporting time frames 183
VI.B.8. Reporting modalities 183
VI.C. Operation in the Arab Countries 184
VI.C.1. Interface with safety reporting rules for clinical trials and post authorisation studies in the Arab Countries 184
VI.C.1.1. Interface with clinical trials 186
VI.C.1.2. Interface with post-authorisation studies 186
VI.C.1.2.1. Non-interventional studies 187
VI.C.1.2.2. Compassionate use, named patient use 188
VI.C.2. Collection of reports 188
VI.C.2.1. National medicines authorities responsibilities 188
VI.C.2.2. Marketing authorisation holders responsibilities 189
VI.C.2.2.1. Spontaneous reports 190
VI.C.2.2.2. Solicited reports 190
VI.C.2.2.3. Case reports published in the scientific and medical literature 191
VI.C.2.2.4. Suspected adverse reactions related to quality defect or falsified medicinal products 192
VI.C.2.2.5. Suspected transmission via a medicinal product of an infectious agent 192
VI.C.2.2.6. Emerging safety issues 193
VI.C.2.2.7. Period between the submission of the marketing authorisation application and the granting of the marketing authorisation 193
VI.C.2.2.8. Period after suspension, revocation or withdrawal of marketing authorisation 194
VI.C.2.2.9. Period during a public health emergency 194
VI.C.2.2.10. Reports from patient support programmes and market research programmes 194
VI.C.3. Reporting time frames 194
VI.C.4. Reporting modalities 195
VI.C.5. Collaboration with the World Health Organization and the National Pharmacovigilance Centres in the Arab Countries 196
VI.C.6. Electronic exchange of safety information in the Arab Countries 196
VI.C.6.1. Applicable guidelines, definitions, international formats, standards and terminologies196
VI.C.6.2. Electronic Reporting of Individual Case Safety Reports 198
V.I.C.6.2.1. Electronic reporting models 198

VI.C.6.2.2. Preparation of Individual Case Safety Reports 198
VI.C.6.2.2.1. General principles 198
VI.C.6.2.2.2. Information on suspect, interacting and concomitant medicinal products 199
VI.C.6.2.2.3. Suspected adverse reactions 200
VI.C.6.2.2.4. Case narrative, causality assessment and comments 201
VI.C.6.2.2.5. Test results 202
VI.C.6.2.2.6. Supplementary information 202
VI.C.6.2.2.7. Follow-up information 203
VI.C.6.2.2.8. What to take into account for data privacy laws 204
VI.C.6.2.2.9. Handling of languages 204
VI.C.6.2.2.10. Nullification of cases 204
VI.C.6.2.3. Special situations 205
VI.C.6.2.3.1. Use of a medicinal product during pregnancy or breastfeeding 205
VI.C.6.2.3.2. Suspected adverse reaction reports published in the scientific and medical literature 206
VI.C.6.2.3.3. Suspected adverse reactions related to overdose, abuse, off-label use, misuse, medication error or occupational exposure 206
VI.C.6.2.3.4. Lack of therapeutic efficacy 206
VI.C.6.2.3.5. Suspected adverse reactions related to quality defect or falsified medicinal products 207
VI.C.6.2.3.6. Suspected transmission via a medicinal product of an infectious agent 207
VI.C.6.2.3.7. Reports originating from organised data collection systems and other systems .208
VI.C.6.2.3.8. Receipt of missing minimum information 209
VI.C.6.2.4. Data quality of individual case safety reports transmitted electronically and duplicate management 209
VI.C.6.2.5. Electronic reporting through company's headquarters 210
VI. Appendix 1: Identification of biological medicinal products 211
VI. Appendix 2: Detailed guidance on the monitoring of scientific and medical literature 214
VI. App2.1 When to start and stop searching in the scientific and medical literature 214
VI. App2.2 Where to look 214
VI. App2.3 Database Searches 215
VI. App2.3.1 Precision and recall 215
VI. App2.3.2 Search construction 215
VI. App2.3.3 Selection of product terms 216
VI. App2.3.4 Selection of search terms 216
VI. App2.3.5 Limits to a search 216
VI. App2.4 Record keeping 217
VI. App2.5 Outputs 217

VI. App2.6 Review and selection of articles 217
VI. App2.7 Day zero 218
VI. App2.8 Duplicates 218
VI. App2.9 Contracting out Literature Search Services 218
VI. App2.10 Submission of copies of articles published in the scientific and medical literature 219
VI. Appendix 3: Nullification of cases 224
VI. Appendix 4: Data quality monitoring of ICSRs transmitted electronically 228
VI. Appendix 5: Duplicate detection and management of ICSRs 231
Module VII - Periodic safety update report (PSUR) 235
VII.A. Introduction 236
VII.B. Structures and processes 237
VII.B.1. Objectives of the periodic update safety report (PSUR) 237
VII.B.2. Principles for the evaluation of the risk-benefit balance within PSURs and scope of the information to be included 238
VII.B.3. Principles for the preparation of PSURs 239
VII.B.4. Reference information 239
VII.B.5. Format and contents of the PSUR 241
VII.B.5.1. PSUR section "Introduction" 245
VII.B.5.2. PSUR section "Worldwide marketing authorisation status" 245
VII.B.5.3. PSUR section "Actions taken in the reporting interval for safety reasons" 245
VII.B.5.4. PSUR section "Changes to reference safety information" 246
VII.B.5.5. PSUR section "Estimated exposure and use patterns" 247
VII.B.5.5.1. PSUR sub-section "Cumulative subject exposure in clinical trials" 247
VII.B.5.5.2. PSUR sub-section "Cumulative and interval patient exposure from marketing experience" 248
VII.B.5.6. PSUR section "Data in summary tabulations" 249
VII.B.5.6.1. PSUR sub-section "Reference information" 250
VII.B.5.6.2. PSUR sub-section "Cumulative summary tabulations of serious adverse events from clinical trials" 250
VII.B.5.6.3. PSUR sub-section "Cumulative and interval summary tabulations from post-marketing data sources" 251
VII.B.5.7. PSUR section "Summaries of significant findings from clinical trials during the reporting interval" 251
VII.B.5.7.1. PSUR sub-section "Completed clinical trials" 252
VII.B.5.7.2. PSUR sub-section "Ongoing clinical trials" 253
VII.B.5.7.3. PSUR sub-section "Long term follow-up" 253
VII.B.5.7.4. PSUR sub-section "Other therapeutic use of medicinal product" 253
VII.B.5.7.5. PSUR sub-section "New safety data related to fixed combination therapies" 253

VII.B.5.8. PSUR section “Findings from non-interventional studies”.....253
VII.B.5.9. PSUR section “Information from other clinical trials and sources”.....254
VII.B.5.9 1. PSUR sub-section “Other clinical trials”.....254
VII.B.5.9 2. PSUR sub-section “Medication errors”.....254
VII.B.5.10. PSUR section “Non-clinical data”.....254
VII.B.5.11. PSUR section “Literature”.....254
VII.B.5.12. PSUR section “Other periodic reports”.....255
VII.B.5.13. PSUR section “Lack of efficacy in controlled clinical trials”.....255
VII.B.5.14. PSUR section “Late-breaking information”.....256
VII.B.5.15. PSUR section “Overview of signals: new, ongoing, or closed”.....256
VII.B.5.16. PSUR section “Signal and risk evaluation”.....258
VII.B.5.16.1. PSUR sub-section “Summary of safety concerns”.....258
VII.B.5.16.2. PSUR sub-section “Signal evaluation”.....259
VII.B.5.16.3. PSUR sub-section “Evaluation of risks and new information”.....260
VII.B.5.16.4. PSUR sub-section “Characterisation of risks”.....261
VII.B.5.16.5. PSUR sub-section: “Effectiveness of risk minimisation (if applicable)”.....262
VII.B.5.17. PSUR section “Benefit evaluation”.....262
VII.B.5.17.1. PSUR sub-section “Important baseline efficacy and effectiveness information”263
VII.B.5.17.2. PSUR sub-section “Newly identified information on efficacy and effectiveness”263
VII.B.5.17.3. PSUR sub-section “Characterisation of benefits”.....263
VII.B.5.18. PSUR section “Integrated benefit-risk analysis for authorised indications”.....264
VII.B.5.18.1. PSUR sub-section “Benefit-risk context - medical need and important alternatives”.....264
VII.B.5.18.2. PSUR sub-section “Benefit-risk analysis evaluation”.....264
VII.B.5.19. PSUR section “Conclusions and actions”.....265
VII.B.5.20. Appendices to the PSUR.....266
VII.B.5.21. Mapping signals and risks to PSUR sections/sub-sections.....266
VII.B.6. Quality systems for PSURs at the level of marketing authorisation holders.....268
VII.B.7. Training of staff members related to the PSUR process.....269
VII.C. Operation of PSURs in the Arab Countries.....269
VII.C.1. Routine submission of PSURs in the Arab Countries.....269
VII.C.1.1. List of European Union reference dates and frequency of submission of PSURs.....270
VII.C.1.1.1. Objectives of the "EU reference dates list".....270
VII.C.1.1.2. Description of the "EU reference dates list".....271
VII.C.1.1.3. Criteria used for defining the frequency of submission of PSURs.....271
VII.C.1.1.4. Maintenance of the list of EU reference dates.....272
VII.C.1.2. Application of the "list of EU reference dates" to the routine submission of PSURs in the Arab Countries.....272

VII.C.1.2.1. Submission of PSURs for medicinal products: general requirement 272

VII.C.1.2.2. Submission of PSURs in case of active substances not included in the EURD list274

VII.C.1.2.3. Medicinal products with conditioned PSURs submission frequency in the marketing authorisation.....274

VII.C.1.2.4. Submission of PSURs for generic, well-established use, traditional herbal and homeopathic medicinal products 275

VII.C.1.2.5. Submission of PSURs for fixed dose combination products 275

VII.C.1.2.6. Publication of the list 275

VII.C.2. Submission of PSURs on demand of a medicines authority in an Arab Country (ad hoc request)275

VII.C.3. Timelines for PSUR submission.....276

VII.C.4. Process for PSUR Assessment in the Arab Countries 276

VII.C.4.1. PSUR assessment by national medicines authorities 276

VII.C.4.2. Relationship between PSUR and risk management plan 277

VII.C.4.2.1. PSUR and risk management plan – common modules 278

VII.C.5. National appendix requirements for periodic safety update reports 278

VII.C.5.1. PSUR national appendix, sub-section "Current national product information" 278

VII.C.5.2. PSUR national appendix, sub-section “Proposed product information” 279

VII.C.5.3. PSUR national appendix, sub-section “Proposed additional pharmacovigilance and risk minimisation activities” 280

VII.C.5.4. PSUR national appendix, sub-section “Summary of ongoing safety concerns” 280

VII.C.5.5. PSUR national appendix, sub-section “Worldwide marketing authorisation status table"280

VII.C.6. Quality systems and record management systems for PSURs in the Arab Countries 282

VII.C.6.1. Quality systems and record management systems at the level of the marketing authorisation holder 282

VII.C.6.2. Quality systems and record management systems at the level of the medicines authorities in Arab Countries.....283

VII.C.7. Renewal of marketing authorisations 283

VII. Appendix 1. Examples of tabulations for estimated exposure and adverse events/reactions data 286

VII.Appendix 2. Example of tabular summary of safety signals that were ongoing or closed during the reporting interval 289

Module VIII – Post authorization safety studies..... 291

VIII.A. Introduction.....292

VIII.B. Structures and processes 293

VIII.B.1. Scope 293

VIII.B.2. Terminology 293

VIII.B.3. Principles.....294

VIII.B.4. Study registration 295

VIII.B.5. Study protocol 296
VIII.B.5.1. Format and content of the study protocol 296
VIII.B.5.2. Substantial amendments to the study protocol 299
VIII.B.6. Reporting of pharmacovigilance data to medicines authorities 299
VIII.B.6.1. Data relevant to the risk-benefit balance of the product 299
VIII.B.6.2. Reporting of adverse reactions/adverse events 300
VIII.B.6.3. Study reports 300
VIII.B.6.3.1 Progress reports 300
VIII.B.6.3.2. Final study report 300
VIII.B.7. Publication of study results 304
VIII.B.7.1. Regulatory submission of manuscripts accepted for publication 304
VIII.B.8. Data protection 304
VIII.B.9. Quality systems, audits and inspections 304
VIII.B.10. Impact on the risk management system 305
VIII.C. Operation in the Arab Countries 305
VIII.C.1. Scope 305
VIII.C.2. Procedure for imposing post-authorisation safety studies 305
VIII.C.3. Impact on the risk management system 306
VIII.C.4. Regulatory supervision of non-interventional post-authorisation safety studies 307
VIII.C.4.1. Roles and responsibilities of the marketing authorisation holder 307
VIII.C.4.2. Roles and responsibilities of the national medicines authority 308
VIII.C.5. Changes to the marketing authorisation following results from a non-interventional post-authorisation safety study 309
VIII.Appendix 1. Methods for post-authorisation safety studies 310
VIII.App1.1. Study designs 310
VIII.App1.1.1. Active surveillance 310
VIII.App1.1.1.1. Intensive monitoring schemes 310
VIII.App1.1.1.2. Prescription event monitoring 311
VIII.App1.1.1.3. Registries 311
VIII.App1.1.2. Observational studies 311
VIII.App1.1.2.1. Cross-sectional study (survey) 312
VIII.App1.1.2.2. Cohort Study 312
VIII.App1.1.2.3. Case-control study 312
VIII.App1.1.2.4. Other designs 313
VIII.App1.1.3. Clinical trials 313
VIII.App1.1.3.1. Large simple trials 314
VIII.App1.1.4. Drug utilisation studies 314

VIII.App1.2. Data sources 314

Module IX – Signal management 316

IX.A. Introduction 317

IX.B. Structures and processes 317

IX.B.1. Sources of data and information 317

IX.B.2. Methodology for signal detection 318

IX.B.3. The signal management process 319

IX.B.3.1. Introduction 319

IX.B.3.2. Signal detection 319

IX.B.3.2.1. Review of individual case safety reports 320

IX.B.3.2.2. Statistical analyses 320

IX.B.3.2.3. Combination of statistical methods and review of individual case safety reports ..321

IX.B.3.3. Signal validation 321

IX.B.3.4. Signal analysis and prioritisation 322

IX.B.3.5. Signal assessment 323

IX.B.3.6. Recommendation for action 324

IX.B.3.7. Exchange of information 324

IX.B.4. Quality requirements 325

IX.B.4.1. Tracking 325

IX.B.4.2. Quality systems and documentation 325

IX.C. Operation of Signal management in Arab Countries 326

IX.C.1. Roles and responsibilities 326

IX.C.1.1. Roles and responsibilities of the national medicines authorities 326

IX.C.1.2. Roles and responsibilities of marketing authorisation holder 327

IX.C.2. Periodicity of data monitoring in “National Pharmacovigilance and Safety reports database” 327

IX.C.3. Processes for regulatory follow-up in the Arab Countries 328

IX.C.4. Signal record management in the Arab Countries 329

Module X– Additional monitoring 330

X.A. Introduction 331

X.B. Structures and processes 332

X.B.1. Principles for assigning additional monitoring status to a medicinal product 332

X.B.2. Communication and transparency 332

X.C. Operation of the additional monitoring in Arab countries 333

X.C.1. Criteria for including a medicinal product in the additional monitoring list 333

X.C.1.1. Mandatory scope 333

X.C.1.2. Optional scope 333

X.C.2. Criteria for defining the initial time period of maintenance in the additional monitoring list 334
X.C.2.1. Mandatory scope 334
X.C.2.2. Optional scope.....334
X.C.3. Roles and responsibilities 334
X.C.3.1. National medicines authority 334
X.C.3.2. The Marketing authorisation holder 335
X.C.4. Creation and maintenance of the list 335
X.C.5. Black symbol and explanatory statements.....335
X.C.6. Transparency 336
Module XI - Public participation in pharmacovigilance 337
Module XII - Continuous pharmacovigilance, ongoing benefit-risk evaluation, regulatory action and planning of public communication 338
Module XIV - International cooperation 340
Module XV – Safety communication..... 341
XV.A. Introduction.....342
XV.B. Structures and processes 342
XV.B.1. Objectives of safety communication 342
XV.B.2. Principles of safety communication 343
XV.B.3. Target audiences.....344
XV.B.4. Content of safety communication.....344
XV.B.5. Means of safety communication.....345
XV.B.5.1. Direct healthcare professional communication (DHPC).....345
XV.B.5.2. Documents in lay language 346
XV.B.5.3. Press communication 347
XV.B.5.4. Website 347
XV.B.5.5. Other web-based communications 347
XV.B.5.6. Bulletins and newsletters 347
XV.B.5.7. Inter-authority communication 348
XV.B.5.8. Responding to enquiries from the public 348
XV.B.5.9. Other means of communication 348
XV.B.6. Effectiveness of safety communication.....348
XV.B.7. Quality system requirements for safety communication 349
XV.C. Operation in Arab Countries 349
XV.C.1. Sharing of safety announcements in the Arab Countries 349
XV.C.1.1. Requirements for the marketing authorisation holder in the Arab Countries 350
XV.C.1.2. Consideration for third parties 350

XV.C.2. Direct healthcare professional communications in the Arab Countries 350
XV.C.2.1. Processing of DHPCs 350
XV.C.2.2. Translation of DHPCs 352
XV.C.2.3. Publication of DHPCs 352

Module XVI – Risk minimization measures: selection of tools and effectiveness indicators 354

XVI.A. Introduction 355
XVI.B. Structures and processes 356
XVI.B.1. General principles 356
XVI.B.2.Risk minimisation measures 357
XVI.B.2.1. Educational programme 358
XVI.B.2.1.1. Educational tools 359
XVI.B.2.1.1.1 Educational tools targeting healthcare professionals 359
XVI.B.2.1.1.2. Educational tools targeting patients and/or carers 359
XVI.B.2.2 Controlled access programme 360
XVI.B.2.3. Other risk minimisation measures 361
XVI.B.2.3.1 Controlled distribution systems 361
XVI.B.2.3.2 Pregnancy prevention programme 361
XVI.B.2.3.3 Direct health care professional communication (DHPC) 362
XVI.B.3. Implementation of risk minimisation measures 362
XVI.B.4. Effectiveness of risk minimisation measures 362
XVI.B.4.1. Process indicators 364
XVI.B.4.1.1 Reaching the target population 364
XVI.B.4.1.2 Assessing clinical knowledge 364
XVI.B.4.1.3 Assessing clinical actions 365
XVI.B.4.2. Outcome indicators 365
XVI.B.5. Coordination 366
XVI.B.6. Quality systems of risk minimisation measures 367
XVI.C. Operation of the Risk minimisation measures in the Arab Countries 367
XVI.C.1. Roles and responsibilities in the Arab Country concerned for implementing additional risk minimisation measures 367
XVI.C.1.1. Roles and responsibilities of the national medicines authorities 367
XVI.C.1.2. Marketing authorisation applicant or holder 368
XVI.C.1.3. Healthcare professionals and patients 369
XVI.C.2. Impact of risk minimisation measures effectiveness on RMP/PSUR 370
XVI. Appendix 1. Key elements of survey methodology 372
XVI.App1.1. Sampling procedures and recruitment strategy 372

XVI.App1.2. Design and administration of the data collection instrument(s) 373
XVI.App1.3. Analytical approaches 373
XVI.App1.4. Ethics, privacy and overall study feasibility 374
GVP: Product- or population-specific considerations (P part) 375
P.I: Vaccines for prophylaxis against infectious diseases 375
P.I.A. Introduction 376
P.I.A.1. Terminology 377
P.I.A.2. Aspects specific to prophylactic vaccines 377
P.I.A.3. Changes of the benefit-risk balance 378
P.I.A.3.1. Efficacy and effectiveness 378
P.I.A.3.2. Biological variability 378
P.I.A.4. Aspects related to vaccination programmes 378
P.I.B. Structures and processes 379
P.I.B.1. Risk management system 379
P.I.B.1.1. RMP part I "Product overview" 379
P.I.B.1.2. RMP part II "Safety specification" 380
P.I.B.1.2.1. RMP module SI "Epidemiology of the indications and target population" 380
P.I.B.1.2.2. RMP module SII "Non-clinical part of the safety specification" 380
P.I.B.1.2.3. RMP module SIV "Populations not studied in clinical trials" 380
P.I.B.1.2.4. RMP module SVI "Additional EU requirements for the safety specification" 381
P.I.B.1.2.5. RMP module SVII "Identified and potential risks" 382
P.I.B.1.2.6. RMP module SVIII "Summary of the safety concerns" 383
P.I.B.1.3. RMP part III "Pharmacovigilance plan" 383
P.I.B.1.3.1. RMP section "Routine pharmacovigilance activities" 383
P.I.B.1.3.2. RMP section "Additional pharmacovigilance activities" 385
P.I.B.1.4. RMP part IV "Plans for post-authorisation efficacy studies" 386
P.I.B.1.5. RMP part V "Risk minimisation measures" 386
P.I.B.2. Periodic safety update report 387
P.I.B.2.1. Integrated benefit-risk analysis 387
P.I.B.3. Post-authorisation safety studies 387
P.I.B.4. Signal management 388
P.I.B.4.1. Standard case definitions 388
P.I.B.4.2. Single report of a serious adverse event 389
P.I.B.4.3. Signal detection in mass vaccination programmes 389
P.I.B.4.4. Disproportionality analyses 389
P.I.B.4.5. Observed to expected analyses 390
P.I.B.4.6. Signal evaluation 390

P.I.B.5. Batch recall and quarantine 391
P.I.B.5.1. Data requirements 392
P.I.B.5.2. Action based on clinical events in the absence of a known quality issue 393
P.I.B.5.3. Action due to identified quality deviations 393
P.I.B.6. Safety communication 393
P.I.C. Operation in the Arab Coutries 395
P.I.C.1. Roles and responsibilities 395
P.I.C.1.1. Vaccinated persons and parents/carers.....395
P.I.C.1.2. Healthcare professionals 395
P.I.C.1.3. Marketing authorisation holders.....396
P.I.C.1.4. National Medicines authorities in the Arab Countries 396
P.I.C.2. Reporting of reactions and emerging safety issues.....397
P.I.C.2.1.Reporting of vaccination failures 397
P.I.C.3. Risk Management System 398
P.I.C.4. Signal management.....398
P.I.C.5. Safety communication about vaccines in the Arab Countries 398
P.II: Biological medicinal products 399
GVP: Annexes..... 400
Annex I – Definitions..... 401
Annex II – Templates 426
Annex II.1. Template of the Risk Management Plan (RMP) in the Arab Countries in integrated format (Rev.1) 427
Annex II.2. Template of the Risk Management Plan (RMP) in the Arab Countries for Generics (Rev.1) 487
Annex II.3. Template of the National Display of the Risk Management Plan (RMP) in the Arab Countries - for MAH/Applicant having Eu RMP (Rev.1).....527
Annex II.4. Templates: Cover page of periodic safety update report (PSUR).....545
Annex II.5. Templates: Direct healthcare-professional communication (DHPC) 546
Annex III – Other pharmacovigilance guidance 548
Annex IV – International Conference on Harmonisation of Technical Requirements for Registration of Pharmaceuticals for Human Use (ICH) guidelines for pharmacovigilance 551
Annex V- Abbreviations 554

Introductory note

Objectives of Pharmacovigilance

Pharmacovigilance has been defined by the World Health Organization (WHO) as the science and activities relating to the detection, assessment, understanding and prevention of adverse effects or any other medicine-related problem.

In line with this general definition, underlying objectives of the applicable legislation for pharmacovigilance are:

- preventing harm from adverse reactions in humans arising from the use of authorised medicinal products within or outside the terms of marketing authorisation or from occupational exposure; and
- promoting the safe and effective use of medicinal products, in particular through providing timely information about the safety of medicinal products to patients, healthcare professionals and the public.

Pharmacovigilance is therefore an activity contributing to the protection of patients' and public health.

Structure of GVP

Pharmacovigilance activities are organised by distinct but connected processes, and each GVP Module presents one major pharmacovigilance process. In addition, GVP provides guidance on the conduct of pharmacovigilance for specific product types or specific populations (P parts) in which medicines are used. These GVP Considerations apply in conjunction with the process-related guidance in the Modules.

While the development of GVP is ongoing, some other guidelines developed by the European Medicines Agency (EMA) under their previous EU regulations remain valid in principle (unless any aspect is not compatible with this guideline); they are acknowledged –from scientific aspects- in the Arab Countries. In addition, those other guidelines may be revised at a later point in time for inclusion in GVP for Arab Countries; they are included under GVP Annex III.

Hence the GVP guideline constitutes mainly of three main building blocks:

- GVP Modules
- GVP P-parts
- GVP Annexes

Within each chapter,

- Section A provides introduction to the legal, technical and scientific context of the respective process.

- Section B gives guidance which reflects scientific and regulatory approaches, formats and standards agreed internationally in various for a; or, where such formal agreements or expert consensus do not exist, Section B describes approaches which are considered in line with general current thinking in the field.
- Section C focuses on the specifics of applying the approaches, formats and standards in the Arab Countries and other aspects of operating the respective process in the Arab Countries.
- In the context of this document, any stated timeline is in calendar days unless otherwise clearly stated.

Format & layout general requirements

For documents to be submitted in electronic form to the national medicines authorities in the Arab Countries in the context of this guideline; these documents should be consistent with the headings described in the relevant GVP Module, and indexed in a manner to allow easy navigation to the contents. In general, embedded documents are discouraged. The use of electronic book-marking and searchable text is highly recommended. Documents such as copies of signed statements or agreements should be included as appendices and described in the index.

For the document sections; where there is no content for any section or annex, those sections or annexes that are provided should still be named according to the format described in the relevant module (i.e. without renaming or renumbering). For example, section /annex 1 should **NOT** be renamed to section /annex 2; instead, section /annex 2 should simply be described as "unused / not applicable/ no information is available" (according to the case), in order that recipients of the document are assured that missing content is intended.

Guideline on good pharmacovigilance practices (GVP)
For Arab Countries

GVP: Modules

Module I– Pharmacovigilance systems and their quality systems

I.A Introduction

This Module contains guidance for the establishment and maintenance of quality assured pharmacovigilance systems for marketing authorisation holders and medicines authorities. How the systems of these organisations interact while undertaking specific pharmacovigilance processes is described in each respective Module of GVP.

The definition of a pharmacovigilance system is a system used by the marketing authorisation holder and by the medicines authorities to fulfill the tasks and responsibilities and designed to monitor the safety of authorised medicinal products and detect any change to their risk-benefit balance. The medicines authorities likewise maintain a pharmacovigilance system to fulfil its pharmacovigilance activities.

For performing their pharmacovigilance activities, marketing authorization holders, medicines authorities shall establish and use quality systems that are adequate and effective for this performance.

By following the overall quality objectives in I.B.4. and the guiding principle in I.B.5. to meet the needs of patients, healthcare professionals and the public in relation to the safety of medicines, the application of the quality system should be adapted to how crucial each pharmacovigilance task is for fulfilling the quality objectives for each medicinal product covered by a quality system.

In this Module, all applicable legal requirements are usually identifiable by the modal verb “shall”. Guidance for the implementation of legal requirements is provided using the modal verb “should”.

I.B. Structures and processes

I.B.1. Pharmacovigilance system

A pharmacovigilance system is defined as a system used by an organisation to fulfil its legal tasks and responsibilities in relation to pharmacovigilance and designed to monitor the safety of authorised medicinal products and detect any change to their risk-benefit balance.

A pharmacovigilance system, like any system, is characterised by its structures, processes and outcomes. For each specific pharmacovigilance process, including its necessary structures, a dedicated Module is included in GVP.

I.B.2. Quality, quality objectives, quality requirements and quality system

For the purpose of GVP, which provides guidance on structures and processes of a pharmacovigilance system, the quality of a pharmacovigilance system can be defined as all the characteristics of the system which are considered to produce, according to estimated likelihoods, outcomes relevant to the objectives of pharmacovigilance.

In general terms, quality is a matter of degree and can be measured. Measuring if the required degree of quality has been achieved necessitates pre-defined quality requirements. Quality requirements are those characteristics of a system that are likely to produce the desired outcome, quality objectives. The overall quality objectives for pharmacovigilance systems are provided I.B.4.

Specific quality objectives and quality requirements for the specific structures and processes of the pharmacovigilance systems are provided in each Module of GVP as appropriate.

The quality system is part of the pharmacovigilance system and consists of its own structures and processes. It shall cover organisational structure, responsibilities, procedures, processes and resources of the pharmacovigilance system as well as appropriate resource management, compliance management and record management.

I.B.3. Quality cycle

The quality system shall be based on all of the following activities:

- quality planning: establishing structures and planning integrated and consistent processes;
- quality adherence: carrying out tasks and responsibilities in accordance with quality requirements;
- quality control and assurance: monitoring and evaluating how effectively the structures and processes have been established and how effectively the processes are being carried out; and
- quality improvements: correcting and improving the structures and processes where necessary.

I.B.4. Overall quality objectives for pharmacovigilance

The overall quality objectives of a pharmacovigilance system are:

- complying with the legal requirements for pharmacovigilance tasks and responsibilities;
- preventing harm from adverse reactions in humans arising from the use of authorised medicinal products within or outside the terms of marketing authorisation or from occupational exposure;
- promoting the safe and effective use of medicinal products, in particular through providing timely information about the safety of medicinal products to patients, healthcare professionals and the public; and
- contributing to the protection of patients' and public health.

I.B.5. Principles for good pharmacovigilance practices

With the aim of fulfilling the overall quality objectives in I.B.4., the following principles should guide the design of all structures and processes as well as the conduct of all tasks and responsibilities:

- The needs of patients, healthcare professionals and the public in relation to the safety of

medicines should be met.

- Upper management should provide leadership in the implementation of the quality system and motivation for all staff members in relation to the quality objectives.
- All persons within the organisation should be involved in and support the pharmacovigilance system on the basis of task ownership and responsibility in a degree according to their tasks and assigned responsibilities.
- All persons involved with the entire organisation should engage in continuous quality improvement following the quality cycle in I.B.3.
- Resources and tasks should be organised as structures and processes in a manner that will support the proactive, risk-proportionate, continuous and integrated conduct of pharmacovigilance.
- All available evidence on the risk-benefit balance of medicinal products should be sought and all relevant aspects, which could impact on the risk-benefit balance and the use of a product, should be considered for decision-making.
- Good cooperation should be fostered between marketing authorisation holders, the national medicines authorities in the Arab Countries, public health organisations, patients, healthcare professionals, learned societies and other relevant bodies in accordance with the applicable legal provisions.

I.B.6. Responsibilities for the quality system within an organization

A sufficient number of competent and appropriately qualified and trained personnel shall be available for the performance of pharmacovigilance activities. Their responsibility should include adherence to the principles defined in I.B.5.

For the purpose of a systematic approach towards quality in accordance with the quality cycle (see I.B.3.); managerial staff (i.e. staff with management responsibilities) in any organisation should be responsible for:

- ensuring that the organisation documents the quality system as described in I.B.11.;
- ensuring that the documents describing the quality system are subject to document control in relation to their creation, revision, approval and implementation;
- ensuring that adequate resources are available and that training is provided (see I.B.7.);
- ensuring that suitable and sufficient premises, facilities and equipment are available (see I.B.8.);
- ensuring adequate compliance management (see I.B.9.);
- ensuring adequate record management (see I.B.10.);
- reviewing the pharmacovigilance system including its quality system at regular intervals in risk-based manner to verify its effectiveness (see I.B.12.) and introducing corrective and preventive measures where necessary;
- ensuring that mechanisms exist for timely and effective communication, including escalation processes of safety concerns relating to medicinal products within an organisation;
- identifying and investigating concerns arising within an organisation regarding suspected

non-adherence to the requirements of the quality and pharmacovigilance systems and taking corrective, preventive and escalation action as necessary;

- ensuring that audits are performed (see I.B.12.).

In relation to the management responsibilities described above, upper management within an organisation should provide leadership through:

- motivating all staff members, based on shared values, trust and freedom to speak and act with responsibility and through recognition of staff members' contributions within the organisation; and
- assigning roles, responsibilities and authorities to staff members according to their competencies and communicating and implementing these throughout the organisation.

I.B.7. Training of personnel for pharmacovigilance

Achieving the required quality for the conduct of pharmacovigilance processes and their outcomes by an organisation is intrinsically linked with the availability of a sufficient number of competent and appropriately qualified and trained personnel (see I.B.6.).

All personnel involved in the performance of pharmacovigilance activities shall receive initial and continued training. For marketing authorisation holders, this training shall relate to the roles and responsibilities of the personnel.

The organisation shall keep training plans and records for documenting, maintaining and developing the competences of personnel. Training plans should be based on training needs assessment and should be subject to monitoring.

The training should support continuous improvement of relevant skills, the application of scientific progress and professional development and ensure that staff members have the appropriate qualifications, understanding of relevant pharmacovigilance requirements as well as experience for the assigned tasks and responsibilities. All staff members of the organisation should receive and be able to seek information about what to do if they become aware of a safety concern.

There should be a process in place within the organisation to check that training results in the appropriate levels of understanding and conduct of pharmacovigilance activities for the assigned tasks and responsibilities, or to identify unmet training needs, in line with professional development plans agreed for the organisations as well as the individual staff members.

Adequate training should also be considered by the organisation for those staff members to whom no specific pharmacovigilance tasks and responsibilities have been assigned but whose activities may have an impact on the pharmacovigilance system or the conduct of pharmacovigilance. Such activities include but are not limited to those related to clinical trials, technical product complaints, medical information, terminologies, sales and marketing, regulatory affairs, legal affairs and audits.

Appropriate instructions on the processes to be used in case of urgency, including business continuity (see I.B.11.2.), shall be provided by the organisation to their personnel.

I.B.8. Facilities and equipment for pharmacovigilance

Achieving the required quality for the conduct of pharmacovigilance processes and their outcomes is also intrinsically linked with appropriate facilities and equipment used to support the processes. Facilities and equipment should include office space, information technology (IT) systems and (electronic) storage space. They should be located, designed, constructed, adapted and maintained to suit their intended purpose in line with the quality objectives for pharmacovigilance (see I.B.4.) also be available for business continuity (see I.B.11.2.). Facilities and equipment which are critical for the conduct of pharmacovigilance (see I.B.11.2.) should be subject to appropriate checks, qualification and/or validation activities to prove their suitability for the intended purpose. There should be processes in place to keep awareness of the valid terminologies (see Module VI) in their valid versions and to keep the IT systems up-to-date accordingly.

I.B.9. Specific quality system procedures and processes

I.B.9.1. Compliance management by marketing authorisation holders

For the purpose of compliance management, marketing authorisation holders shall have specific quality system procedures and processes in place in order to ensure the following:

- the continuous monitoring of pharmacovigilance data, the examination of options for risk minimisation and prevention and that appropriate measures are taken by the marketing authorisation holder (see Modules IX and XII);
- the scientific evaluation of all information on the risks of medicinal products as regards patients' or public health, in particular as regards adverse reactions in human beings arising from use of the product within or outside the terms of its marketing authorisation or associated with occupational exposure (see Modules VI, VII, VIII, IX);
- the submission of accurate and verifiable data on serious and non-serious adverse reactions to the national medicines authorities within the legally required time-limits (see Modules VI and IX);
- the quality, integrity and completeness of the information submitted on the risks of medicinal products, including processes to avoid duplicate submissions and to validate signals (see Modules V, VI, VII, VIII and IX);
- effective communication by the marketing authorisation holder with national medicines authorities, including communication on new or changed risks, the pharmacovigilance system master file (see Module II), risk management systems (see Module V), risk minimisations measures (see Modules V and XVI), periodic safety update reports (see Module VII), corrective and preventive actions (see Modules II, III and IV) and post-authorisation safety studies (see Module VIII);
- the update of product information by the marketing authorisation holder in the light of scientific knowledge (see Module XII);
- appropriate communication of relevant safety information to healthcare professionals and patients (see Module XII and XV).

I.B.9.2. Compliance management by national medicines authorities

For the purpose of compliance management, national medicines authorities shall establish specific quality system procedures and processes in order to achieve all of the following objectives:

- ensuring the evaluation of the quality, including completeness, of pharmacovigilance data submitted;
- ensuring the assessment of pharmacovigilance data and its processing in accordance with the legal timelines;
- ensuring independence in the performance of pharmacovigilance activities;
- ensuring effective communication with patients, healthcare professionals, marketing authorisation holders and the general public;
- conducting inspections, including pre-authorisation inspections.

Independence in the performance of pharmacovigilance activities is interpreted in the sense that all regulatory decisions on medicinal products should be taken in the sole interest of patients' and public health.

I.B.10. Record management

The organisation shall record all pharmacovigilance information and ensure that it is handled and stored so as to allow accurate reporting, interpretation and verification of that information.

A record management system shall be put in place for all documents used for pharmacovigilance activities, ensuring their retrievability as well as traceability of the measures taken to investigate safety concerns, of the timelines for those investigations and of decisions on safety concerns, including their date and the decision-making process.

The record management system should support:

- the management of the quality of pharmacovigilance data, including their completeness, accuracy and integrity;
- timely access to all records;
- effective internal and external communication; and
- the retention of documents relating to the pharmacovigilance systems and the conduct of pharmacovigilance for individual medicinal products, in accordance with the applicable retention periods.

In addition, marketing authorisation holders shall establish mechanisms enabling the traceability and follow-up of adverse reaction reports.

In this context, it should be ensured that the fundamental right to personal data protection is fully and effectively guaranteed in all pharmacovigilance activities in conformity with legal provisions. The purpose of safeguarding public health constitutes a substantial public interest and the processing of personal data should be justified if identifiable personal data are processed only

where necessary and only where the parties involved assess this necessity at every stage of the pharmacovigilance process. As part of a record management system, specific measures should therefore be taken at each stage in the storage and processing of pharmacovigilance data to ensure data security and confidentiality. This should involve strict limitation of access to documents and databases to authorised personnel respecting the medical and administrative confidentiality of the data.

There should be appropriate structures and processes in place to ensure that pharmacovigilance data and records are protected from destruction during the applicable record retention period.

The record management system should be described in a record management policy.

I.B.11. Documentation of the quality system

All elements, requirements and provisions adopted for the quality system shall be documented in a systematic and orderly manner in the form of written policies and procedures, such as quality plans, quality manuals and quality records.

A quality plan documents the setting of quality objectives and sets out the processes to be implemented to achieve them. A procedure is a specified way to carry out a process and may take the format of a standard operating procedure and other work instruction or quality manual. A quality manual documents the scope of the quality system, the processes of the quality system and the interaction between the two. A quality record is a document stating results achieved or providing evidence of activities performed.

<u>In order to have a systematic approach, the organisation should define in advance:</u>

- quality objectives specific to their organisations in accordance with the overall quality objectives provided under I.B.4. and the structure- and process-specific quality objectives in accordance with each Module of GVP; and
- methods for monitoring the effectiveness of the pharmacovigilance system (see I.B.12.).

<u>The quality system shall be documented by:</u>

- documents on organisational structures and assignments of tasks to personnel (see I.B.11.1.);
- training plans and records (see I.B.7.);
- instructions for the compliance management processes (see I.B.9.);
- appropriate instructions on the processes to be used in case of urgency, including business continuity (see I.B.11.2.)
- performance indicators where they are used to continuously monitor the good performance of pharmacovigilance activities
- reports of quality audits and follow-up audits, including their dates and results.

Training plans and records shall be kept and made available for audit and inspection.

It is recommended that the documentation of the quality system also includes:

- the methods of monitoring the efficient operation of the quality system and, in particular, its ability to fulfil the quality objectives;
- a record management policy;
- records created as a result of pharmacovigilance processes which demonstrate that key steps for the defined procedures have been taken;
- records and reports relating to the facilities and equipment including functionality checks, qualification and validation activities which demonstrate that all steps required by the applicable requirements, protocols and procedures have been taken;
- records to demonstrate that deficiencies and deviations from the established quality system are monitored, that corrective and preventive actions have been taken, that solutions have been applied to deviations or deficiencies and that the effectiveness of the actions taken has been verified.

I.B.11.1. Additional quality system documentation by marketing authorisation holders

In addition to the quality system documentation in accordance with I.B.11., marketing authorisation holders shall document:

- their human resource management in the pharmacovigilance system master file (PSMF) (see Module II)
- job descriptions defining the duties of the managerial and supervisory staff.
- an organisational chart defining the hierarchical relationships of managerial and supervisory staff.
- instructions on critical processes (see I.B.11.2.) in the pharmacovigilance system master file (PSMF) (see Module II); and
- their record management system in the pharmacovigilance system master file (PSMF) (see Module II).

It is recommended that the documentation of the quality system additionally includes the organisational structures and assignments of tasks, responsibilities and authorities to all personnel directly involved in pharmacovigilance tasks.

For the requirements of documenting the quality system in the pharmacovigilance system master file (PSMF) or its annexes, see Module II.

I.B.11.2. Critical pharmacovigilance processes and business continuity

The following pharmacovigilance processes should be considered as critical include:

- continuous safety profile monitoring and benefit-risk evaluation of authorised medicinal products;

- establishing, assessing and implementing risk management systems and evaluating the effectiveness of risk minimisation;
- collection, processing, management, quality control, follow-up for missing information, coding, classification, duplicate detection, evaluation and timely electronic transmission of individual case safety reports (ICSRs) from any source;
- signal management;
- scheduling, preparation (including data evaluation and quality control), submission and assessment of periodic safety update reports;
- meeting commitments and responding to requests from national medicines authorities, including provision of correct and complete information;
- interaction between the pharmacovigilance and product quality defect systems;
- communication about safety concerns between marketing authorisation holders and national medicines authorities, in particular notifying changes to the risk-benefit balance of medicinal products;
- communicating information to patients and healthcare professionals about changes to the risk-benefit balance of products for the aim of safe and effective use of medicinal products;
- keeping product information up-to-date with the current scientific knowledge, including the conclusions of the assessment and recommendations from the applicable medicines authority.
- implementation of variations to marketing authorisations for safety reasons according to the urgency required.

Business continuity plans should be established in a risk-based manner and should include:

- provisions for events that could severely impact on the organisation's staff and infrastructure in general or on the structures and processes for pharmacovigilance in particular; and
- back-up systems for urgent exchange of information within an organisation, amongst organisations sharing pharmacovigilance tasks as well as between marketing authorisation holders and national medicines authorities.

I.B.12. Monitoring of the performance and effectiveness of the pharmacovigilance system and its quality system

Processes to monitor the performance and effectiveness of a pharmacovigilance system and its quality system should include:

- reviews of the systems by those responsible for management;
- audits;
- compliance monitoring;
- inspections;
- evaluating the effectiveness of actions taken with medicinal products for the purpose of minimising risks and supporting their safe and effective use in patients.

The organisation may use performance indicators to continuously monitor the good performance pharmacovigilance activities in relation to the quality requirements. The quality requirements for each pharmacovigilance process are provided in each Module of GVP as appropriate.

The requirements for the quality system itself are laid out in this Module and its effectiveness should be monitored by managerial staff, who should review the documentation of the quality system (see I.B.11.) at regular intervals, with the frequency and the extent of the reviews to be determined in a risk-based manner. Pre-defined programmes for the review of the system should therefore be in place. Reviews of the quality system should include the review of standard procedures and work instructions, deviations from the established quality system, audit and inspections reports as well as the use of the indicators referred to above.

Risk-based audits of the quality system shall be performed at regular intervals to ensure that it complies with the requirements for the quality system, the human resource management, the compliance management, the record management and the data retention and to ensure its effectiveness. Audits of the quality system should include audit of the pharmacovigilance system which is the subject of the quality system. The methods and processes for the audits are described in Module IV. In relation to the pharmacovigilance system of a marketing authorisation holder, a report shall be drawn up on the results for each quality audit and any follow-up audits be sent to the management responsible for the matters audited. The report should include the results of audits of organisations or persons the marketing authorisation holder has delegated tasks to, as these are part of the marketing authorisation holder‘s pharmacovigilance system.

As a consequence of the monitoring of the performance and effectiveness of a pharmacovigilance system and its quality system (including the use of audits), corrective and preventive measures should be implemented when deemed necessary. In particular as a consequence of audits, corrective action(s), including a follow-up audit of deficiencies, shall be taken where necessary. Additionally, the competent authorities should have in place arrangements for monitoring the compliance of marketing authorisations holders with legally required pharmacovigilance tasks and responsibilities. They shall further ensure compliance with the legal requirements by means of conducting inspections of marketing authorisation holders (see Module III). Guidance on compliance monitoring for each pharmacovigilance process is provided in each Module of GVP as appropriate.

Requirements and methods for evaluating the effectiveness of actions taken upon medicinal products for the purpose of minimising risks and supporting the safe and effective use of medicines in patients are described in Module XVI.

I.B.13. Preparedness planning for pharmacovigilance in public health emergencies

Any pharmacovigilance system should be adaptable to public health emergencies and preparedness plans should be developed as appropriate. For preparedness planning in Arab Countries, see I.C.3.

I.C. Operation of Pharmacovigilance systems in Arab Countries

I.C.1. Overall pharmacovigilance responsibilities of the applicant and marketing authorisation holder in the Arab Countries

The marketing authorisation holder in the Arab Country concerned is responsible for the respective pharmacovigilance tasks and responsibilities in order to assure responsibility and liability for its authorised medicinal products and to ensure that appropriate action can be taken, when necessary.
For this purpose, the marketing authorisation holder shall operate a pharmacovigilance system and shall establish and use a quality system that is adequate and effective for performing its pharmacovigilance activities.

There may be circumstances where a marketing authorisation holder may establish more than one pharmacovigilance system, e.g. specific systems for particular types of products (e.g. vaccines, products available without medical prescription).

A description of the pharmacovigilance system shall be developed by the applicant for a marketing authorisation in the format of a pharmacovigilance system master file (PSMF) and be maintained by the marketing authorisation holder for all authorised medicinal products (see Module II). The applicant or the marketing authorisation holder is also responsible for developing and maintaining product-specific risk management systems (see Module V).

Guidance on the structures and processes on how the marketing authorisation holder should conduct the pharmacovigilance tasks and responsibilities is provided in the respective GVP Modules.

I.C.1.1. Responsibilities of the marketing authorisation holder in relation to the qualified person responsible for pharmacovigilance in the Arab Country concerned

As part of the pharmacovigilance system, the marketing authorisation holder shall have permanently and continuously at its disposal an appropriately qualified person responsible for pharmacovigilance (QPPV) in the Arab Country concerned. For multinational MAHs a Local Safety Responsible (LSR) may be accepted in some Arab Countries; consult national medicines authorities for national requirements.
The marketing authorisation holder shall submit the name and contact details of the QPPV/LSR to the national medicines authorities. Changes to this information should be submitted in accordance with regulation on the national variations guidelines.

The QPPV/LSR position is a full time job. The duties of the QPPV/LSR shall be defined in a job description. The appointed person shall be **fully dedicated** to his job as a QPPV/LSR. The hierarchical relationship of the QPPV/LSR shall be defined in an organisational chart together with those of other managerial and supervisory staff.

Information relating to the QPPV shall be included in the pharmacovigilance systems master file (PSMF) (see Module II).

Each Pharmacovigilance system can have only one QPPV. A QPPV may be employed by more than one marketing authorisation holder (i.e. only in case of subcontracting to a third party organisation), for a shared or for separate pharmacovigilance systems or may fulfil the role of QPPV for more than one pharmacovigilance system of the same marketing authorisation holder, provided that the QPPV is able to fulfil all obligations.

For multinational MAHs; in addition to the headquarter QPPV, the national medicines authorities request the nomination of a pharmacovigilance contact person (local safety responsible) in each concerned Arab Country reporting to the QPPV Reporting in this context relates to pharmacovigilance tasks and responsibilities and not necessarily to line management. A contact person at national level may also be nominated as the Local Safety Responsible (LSR)

The marketing authorisation holder shall ensure that the QPPV has sufficient authority to influence the performance of the quality system and the pharmacovigilance activities of the marketing authorisation holder. The marketing authorisation holder should therefore ensure that the QPPV has access to the pharmacovigilance system master file (PSMF) as well as authority over it and is notified of any changes to it in accordance with Module II (see I.C.1.3). The authority over the pharmacovigilance system and the PSMF should allow the QPPV to implement changes to the system and to provide input into risk management plans (see Module V) as well as into the preparation of regulatory action in response to emerging safety concerns (see Module XII).
Overall, the marketing authorisation holder should ensure that structures and processes are in place, so that the QPPV can fulfil the responsibilities listed in I.C.1.3. In order to do this, the marketing authorisation holder should ensure that mechanisms are in place so that the QPPV receives all relevant information and that the QPPV can access all information the QPPV considers relevant, in particular on:

- emerging safety concerns and any other information relating to the benefit-risk evaluation of the medicinal products covered by the pharmacovigilance system;
- ongoing or completed clinical trials and other studies the marketing authorisation holder is aware of and which may be relevant to the safety of the medicinal products;
- information from sources other than from the specific marketing authorisation holder, e.g. from those with whom the marketing authorisation holder has contractual arrangements; and
- the procedures relevant to pharmacovigilance which the marketing authorisation holder has in place at every level in order to ensure consistency and compliance across the organisation.

The outcome of the regular reviews of the quality system referred to in I.B.6. and I.B.12. and the measures introduced should be communicated by the managerial staff to the QPPV.

Compliance information should be provided to the QPPV on a periodic basis. Such information also be used to provide assurance to the QPPV that commitments in the framework of risk management plans and post-authorisation safety systems are being adhered to.

The managerial staff should also inform the QPPV of scheduled pharmacovigilance audits. The QPPV should be able to trigger an audit where appropriate. The managerial staff should provide QPPV with a copy of the corrective and preventive action plan following each audit relevant to pharmacovigilance system the QPPV is responsible for, so that the QPPV can assure that appropriate corrective actions are implemented.

In particular with regard to its adverse reaction database (or other systems to collate adverse reaction reports), the marketing authorisation holder should implement a procedure to ensure that the QPPV is able to obtain information from the database, for example, to respond to urgent requests for information from the national medicines authorities, at any time. If this procedure requires the involvement of other personnel, for example database specialists, then this should be taken into account in the arrangements made by the marketing authorisation holder for supporting the QPPV outside of normal working hours.

When a marketing authorisation holder intends to expand its product portfolio, for example, by acquisition of another company or by purchasing individual products from another marketing authorisation holder, the QPPV should be notified as early as possible in the due diligence process in order that the potential impact on the pharmacovigilance system can be assessed and the system be adapted accordingly. The QPPV may also have a role in determining what pharmacovigilance data should be requested from the other company, either pre- or post-acquisition. In this situation, the QPPV should be made aware of the sections of the contractual arrangements that relate to responsibilities for pharmacovigilance activities and safety data exchange and have the authority to request amendments.

When a marketing authorisation holder intends to establish a partnership with another marketing authorisation holder, organisation or person that has a direct or indirect impact on the pharmacovigilance system, the QPPV should be informed early enough and be involved in the preparation of the corresponding contractual arrangements (see I.C.1.5.) so that all necessary provisions relevant to the pharmacovigilance system are included.

I.C.1.2. Qualifications of the qualified person responsible for pharmacovigilance in the Arab Country concerned

The marketing authorisation holder shall ensure that the QPPV has acquired adequate theoretical and practical knowledge[1] for the performance of pharmacovigilance activities. The QPPVs should have a minimum of bachelor degree of pharmacy or medicine, basic training in epidemiology and biostatics (for KSA only he; should be also licensed by Saudi Commission for Health Specialties). In addition; they should have the skill for the management of pharmacovigilance systems as well

[1] E.g. Pharmacovigilance methods, MedDRA coding, ICSRs processing activities , Evidence based medicine, How to conduct literature search, Causality assessment , Case Narrative Writing for Reporting Adverse Events, Pharmacovigilance quality management, Pharmacoepidemiology, Biostatiscis, Signal detection, Medical Aspects of Adverse Drug Reactions, Risk benefit assessment, National pharmacovigilance regulations , Pharmacovigilance Planning and Risk Management Plans, Risk communication

expertise or access to expertise in relevant areas such as medicine, pharmaceutical sciences as well as epidemiology and biostatistics.

The expectation is that the applicant or marketing authorisation holder will assess the qualification of the QPPV prior to appointment by, for example, reviewing university qualifications, knowledge of national pharmacovigilance requirements and experience[2] in pharmacovigilance.

The applicant or marketing authorisation holder should provide the QPPV with training in relation to its pharmacovigilance system, which is appropriate for the role prior to the QPPV taking up the position and which is appropriately documented. Consideration should be given to additional training, as needed, of the QPPV in the medicinal products covered by the pharmacovigilance system.

I.C.1.3. Role of the qualified person responsible for pharmacovigilance in the Arab Country concerned

The qualified person responsible for pharmacovigilance (QPPV) is a natural[3] person.

The QPPV appointed by the marketing authorisation holder shall be appropriately qualified (see I.C.1.2.) and shall be at the marketing authorisation holder's disposal permanently and continuously Back-up procedures in the case of absence of the QPPV shall be in place and should be accessible through the QPPV's contact details. The QPPV should ensure that the back-up person has all necessary information to fulfil the role.

The QPPV shall be responsible for the establishment and maintenance of the marketing authorisation holder's pharmacovigilance system and therefore shall have sufficient authority to influence the performance of the quality system and the pharmacovigilance activities and to promote, maintain and improve compliance with the legal requirements. Hence, the QPPV should have access to the pharmacovigilance system master file (PSMF) (see Module II) and be in a position of authority to ensure and to verify that the information contained in the PSMF is an accurate and up-to-date reflection of the pharmacovigilance system under the QPPV's responsibility.

In relation to the medicinal products covered by the pharmacovigilance system, specific additional responsibilities of the QPPV should include:

---

[2] Taking into consideration that pharmacovigilance practice and regulations are relatively new in the Arab Countries, thus having an experienced QPPV may be challenging. Accordingly, it is accepted by the national medicines authorities in the Arab Countries **that for only a transitional period** the QPPV qualifications may be expressed in terms of his pharmacovigilance training rather than his practical experience in pharmacovigilance. Under these circumstances, once the QPPV is appointed, the MAH is responsible of providing him the unachieved trainings in light of the checklist in module II. (Consult with national medicines authority in each Arab Country for transitional period duration & conditions, if any,).

[3] A natural person is a real human being, as distinguished from a corporation which is often treated at law as a fictitious person.

- having an overview of medicinal product safety profiles and any emerging safety concerns;
- having awareness of any conditions or obligations adopted as part of the marketing authorisations and other commitments relating to safety or the safe use of the products;
- having awareness of risk minimisation measures;
- being aware of and having sufficient authority over the content of risk management plans;
- being involved in the review and sign-off of protocols of post-authorisation safety studies conducted in the Arab Country concerned or pursuant to a risk management plan agreed in the Arab Country concerned;
- having awareness of post-authorisation safety studies requested by the national medicines authority including the results of such studies;
- ensuring conduct of pharmacovigilance and submission of all pharmacovigilance-related documents in accordance with the national legal requirements and GVP in Arab Countries;
- ensuring the necessary quality, including the correctness and completeness, of pharmacovigilance data submitted to the national medicines authorities;
- ensuring a full and prompt response to any request from the national medicines authorities for the provision of additional information necessary for the benefit-risk evaluation of a medicinal product;
- providing any other information relevant to the benefit-risk evaluation to the national medicines authorities;
- providing input into the preparation of regulatory action in response to emerging safety concerns (e.g. variations, urgent safety restrictions, and communication to patients and healthcare professionals);
- the QPPV or the LSR shall acting as a single pharmacovigilance contact point for the national medicines authorities on a 24-hour basis and also as a contact point for pharmacovigilance inspections.

This responsibility for the pharmacovigilance system means that the QPPV has oversight over the functioning of the system in all relevant aspects, including its quality system (e.g. standard operating procedures, contractual arrangements, database operations, compliance data regarding quality, completeness and timeliness of expedited reporting and submission of periodic update reports, audit reports and training of personnel in relation to pharmacovigilance). Specifically for the adverse reaction database, if applicable, the QPPV should be aware of the validation status of the database, including any failures that occurred during validation and the corrective actions that have been taken to address the failures. The QPPV should also be informed of significant changes that are made to the database (e.g. changes that could have an impact on pharmacovigilance activities).

The QPPV may delegate specific tasks, under supervision, to appropriately qualified and trained individuals, for example, acting as safety experts for certain products, provided that the QPPV maintains system oversight and overview of the safety profiles of all products. Such delegation should be documented.

I.C.1.4. Specific quality system processes of the marketing authorisation holder in the Arab Country concerned

In applying the requirements set out in I.B.9.1. in the Arab Countries, the marketing authorisation holder shall put in place the following additional specific quality system processes for ensuring:

- the submission of adverse reaction data to National Pharmacovigilance Center/ Directorate within the legal timelines;
- the monitoring of the use of terminology[4] either systematically or by regular random
- the retention of minimum elements of the pharmacovigilance system master file (PSMF) (see Module II) as long as the system described in the PSMF exists and for at least further 5 years after it has been formally terminated by the marketing authorisation holder;
- the retention of pharmacovigilance data and documents relating to individual authorised medicinal products as long as the marketing authorisation exists and for at least further 10 years after the marketing authorisation has ceased to exist;

The retention periods above apply unless the documents shall be retained for a longer period where national law so requires.

During the retention period, retrievability of the documents should be ensured. Documents can be retained in electronic format, provided that the electronic system has been appropriately validated and appropriate arrangements exist for system security, access and back-up of data. If documents in paper format are transferred into an electronic format, the transfer process should ensure that all of the information present in the original format is retained in a legible manner and that the media used for storage will remain readable over time. Documents transferred in situations where the business of the marketing authorisation holder is taken over by another organisation should be complete.

[4] **Use of internationally agreed terminology**

For the classification, retrieval, presentation, risk-benefit evaluation and assessment, electronic exchange and communication of pharmacovigilance and medicinal product information, marketing authorisation holders and the health authorities shall apply the following terminology:

(a) the Medical Dictionary for Regulatory Activities (MedDRA) as developed by the International Conference on Harmonisation of Technical Requirements for Registration of Pharmaceuticals for Human Use (ICH), multidisciplinary topic M1;

(b) the terminology set out in EN ISO 11615:2012, Health Informatics, Identification of Medicinal Products (IDMP) standard, 'Data elements and structures for unique identification and exchange of regulated **medicinal product information'** (ISO/FDIS 11615:2012);

(c) the terminology set out in EN ISO 11616:2012 Health Informatics, Identification of Medicinal Products (IDMP) standard, 'Data elements and structures for unique identification and exchange of regulated **pharmaceutical product information'** (ISO/FDIS 11616:2012);

(d) the terminology set out in EN ISO 11238:2012 Health Informatics, Identification of Medicinal Products (IDMP) standard, 'Data elements and structures for unique identification and exchange of regulated **information on substances'** (ISO/FDIS 11238:2012);

(e) the terminology set out in EN ISO 11239:2012 Health Informatics, Identification of Medicinal Products (IDMP) standard, 'Data elements and structures for unique identification and exchange of regulated information on **pharmaceutical dose forms**, **units of presentation** and **routes of administration**' (ISO/FDIS 11239:2012);

(f) the terminology set out in EN ISO 11240:2012 Health Informatics, Identification of Medicinal Products (IDMP) standard, 'Data elements and structures for unique identification and exchange of **units of measurement**' (ISO/FDIS 11240:2012).

I.C.1.5. Quality system requirements for pharmacovigilance tasks subcontracted by the marketing authorisation holder

The marketing authorisation holder may subcontract certain activities of the pharmacovigilance system to third parties, i.e. to another organisation. This may include the role of the QPPV. The marketing authorisation holder shall nevertheless retain full responsibility for the completeness and accuracy of the pharmacovigilance system master file (PSMF) (see Module II). The ultimate responsibility for the fulfilment of all pharmacovigilance tasks and responsibilities and the quality and integrity of the pharmacovigilance system always remains with the marketing authorisation holder.

Where a marketing authorisation holder has subcontracted some tasks of its pharmacovigilance tasks, it shall retain responsibility for ensuring that an effective quality system is applied in relation to those tasks. All guidance provided in GVP is also applicable to the other organisation to which the tasks have been subcontracted.

When subcontracting tasks to another organisation, the marketing authorization holder shall draw up subcontracts and these should be detailed, up-to-date and clearly document the contractual arrangements between the marketing authorisation holder and the other organisation, describing arrangements for delegation and the responsibilities of each party. A description of the subcontracted activities and/or services shall be included in the PSMF and a list of the shall be included in an annex to the PSMF, specifying the product(s) concerned (see Module II). The other organization may be subject to inspection at the discretion of the national medicines authorities.

Contractual arrangements should be prepared with the aim of enabling compliance with the legal requirements by each party involved. When preparing contractual arrangements, the marketing authorisation holder should include sufficiently detailed descriptions of the delegated tasks, the related interactions and data exchange, together with, for example, agreed definitions, tools, assignments and timelines. The contractual arrangements should also contain clear information on the practical management of pharmacovigilance as well as related processes, including those for the maintenance of pharmacovigilance databases. Further, they should indicate which processes are in place for checking whether the agreed arrangements are being adhered to on an ongoing basis. In this respect, regular risk-based audits of the other organisation by the marketing authorisation holder or introduction of other methods of control and assessment are recommended.

For responsibilities of the MAH towards the QPPV in this context, see I.C.1.1.

I.C.2. Overall pharmacovigilance responsibilities within each of the Arab Countries

The national medicines authorities in the Arab Countries are responsible for the respective pharmacovigilance tasks and responsibilities in order to ensure that appropriate action can be taken, when necessary.

For this purpose each national medicines authority shall operate a pharmacovigilance system and shall establish and use an adequate and effective quality system for performing their pharmacovigilance activities.

I.C.2.1. Role of the national medicines authorities

Each national medicines authority in an Arab Country must operate a pharmacovigilance system [through its National Pharmacovigilance and Drug Safety Centre/ Directorate (NCP)] for the fulfilment of their pharmacovigilance tasks. In this context, the medicines authority in an Arab Country is responsible for the safety monitoring of each medicinal product, in the territory of that Arab Country. In particular, the medicines authority in each Arab Country shall be responsible for monitoring data originating in their territory.

The medicines authority in an Arab Country is responsible for granting, varying, suspending and revoking a marketing authorisation. The pharmacovigilance tasks and responsibilities of medicines authorities for each process in relation to such products, are detailed in the respective Modules of GVP.

The national medicines authority should monitor the compliance of the marketing authorisation holder with national legal pharmacovigilance requirements.

I.C.2.2. Role of the national Pharmacovigilance Advisory Committee

The role of the Pharmacovigilance advisory committee is to provide advice on the safety of medicinal products for human use and the investigation of adverse reactions, in order to enable effective risk identification, assessment and management, in the pre- and post-authorization phase leading to recommendations on action at the request of the national medicines authority for products available in relevant Arab Country. The roles and responsibilities of the Pharmacovigilance Advisory Committee include but not limited to the following:

1. Evaluation of potential signals arising from spontaneous reporting, including those identified from “National Pharmacovigilance and Safety reports database”, and all other sources.
2. Investigation of adverse reactions.
3. Regularly review Drug monitor of safety concerns.
4. Discussion of emerging safety concerns at the request of the National Pharmacovigilance and Drug Safety Center / Directorate (NPC).
5. Discussion of PSURs at the request of the NPC.
6. Recommendations to the NPC on Risk-benefit evaluations and actions necessary to minimize risk and maximize benefit.

I.C.2.3. Specific quality system processes of the quality systems of medicines authorities in Arab Countries

The national medicines authorities shall put in place the following additional specific quality system processes for:

- monitoring and validating the use of terminology 4, either systematically or by regular random

evaluation;

- assessing and processing pharmacovigilance data in accordance with the timelines provided by national regulations;
- arranging for the essential documents describing their pharmacovigilance systems to be kept as long as the system exists and for at least further 5 years after they have been formally terminated;
- ensuring that pharmacovigilance data and documents relating to individual authorised medicinal products are retained as long as the marketing authorisation exists or for at least further 10 years after the marketing authorisation has expired.

In this context, documents relating to a medicinal product include documents of a reference medicinal product where this is applicable.

The retention periods above apply unless the documents shall be retained for a longer period where national law so requires.

During the retention periods referred to above, retrievability of the documents should be ensured.

Documents can be retained in electronic format, provided that the electronic system has been appropriately validated and appropriate arrangements exist for system security, access and back-up of data. If pharmacovigilance documents in paper format are transferred into an electronic format, the transfer process should ensure that all of the information present in the original format is retained in a legible manner and that the media used for storage will remain readable over time.

In addition to the above, national medicines authorities shall establish procedures for collecting and recording all suspected adverse reactions that occur in their territory (see Module VI) .

In addition, the national medicines authorities shall establish procedures for literature monitoring.

In addition to the quality system documentation in accordance with I.B.11., national medicines authorities shall clearly determine, and to the extent necessary, keep accessible the organisational structures and the distribution of tasks and responsibilities.

Quality audits of the national medicines authorities ‘pharmacovigilance systems (see I.B.12.) shall be performed according to a common methodology.

I.C.3. Preparedness planning in the Arab Countries for pharmacovigilance in public health emergencies

The pharmacovigilance systems of marketing authorisation holders, medicines authorities in Arab countries should be adaptable to public health emergencies. Preparedness plans should be developed as appropriate (see I.B.13.).
A public health emergency is a public health threat duly recognised either by the World Health Organization (WHO) or the national health authority.
Pharmacovigilance requirements for public health emergencies should be considered by the national medicines authorities on a case-by-case basis and appropriately notified to marketing authorisation holders and the public. The national medicines authorities publish their notifications on their websites.

Guideline on good pharmacovigilance practices (GVP) For Arab Countries

GVP: Modules

Module II- Pharmacovigilance system master file

II.A. Introduction

There is legal requirement for marketing authorisation holders (MAHs) to maintain and make available upon request a pharmacovigilance system master file (PSMF) to strengthen the conduct of pharmacovigilance activities in the Arab Countries.

The pharmacovigilance system master file definition is a detailed description of the pharmacovigilance system used by the marketing authorisation holder with respect to one or more authorised medicinal products.

The pharmacovigilance system master file shall be located either at the site where the main pharmacovigilance activities of the marketing authorisation holder are performed or at the site where the qualified person responsible for pharmacovigilance operates.

It is a requirement of the marketing authorisation application that summary information about the pharmacovigilance system is submitted to the national medicines authorities. This summary includes information on the location of the pharmacovigilance system master file (see II.B.2.1). There is no requirement for variations for changes in the content of the pharmacovigilance system master file.

This Module provides detailed guidance regarding the requirements for the pharmacovigilance system master file, including its maintenance, content and associated submissions to national medicines authorities.

Special considerations for multinational MAHs/ applicant are provided in II.C.3.

In this Module, all applicable legal requirements are referenced by the modal verb “shall”. Guidance for the implementation of legal requirements is provided using the modal verb “should”.

II.B. Structures and processes

The pharmacovigilance system master file is a legal requirement in the Arab Countries. This guidance concerns the requirements for the pharmacovigilance system master file and is applicable for any medicinal product authorised in the Arab country concerned. The required content and management of the pharmacovigilance system master file applies irrespective of the organisational structure of a marketing authorisation holder, including any subcontracting or delegation of activities, or their location. Irrespective of the location of other activities, the qualified person for pharmacovigilance (QPPV’s) residence, the location at which he/she carries out his/her tasks..

The content of the pharmacovigilance system master file should reflect global availability of safety information for medicinal products authorised in the Arab Country concerned, with information on the pharmacovigilance system not just confined to local or regional activities.

II.B.1. Objectives

The pharmacovigilance system master file shall describe the pharmacovigilance system and support/document its compliance with the requirements. As well as fulfilling the requirements for a

pharmacovigilance system master file laid down in the national legislation and guidance, it shall also contribute to the appropriate planning and conduct of audits by the applicant or marketing authorisations holder(s), the fulfilment of supervisory responsibilities of the QPPV, and of inspections or other verification of compliance by national medicines authorities. The pharmacovigilance system master file provides an overview of the pharmacovigilance system, which may be requested and assessed by national medicines authorities during marketing authorisation application(s) or post-authorisation.

Through the production and maintenance of the pharmacovigilance system master file, the marketing authorisation holder and the QPPV should be able to:

- gain assurance that a pharmacovigilance system has been implemented in accordance with the requirements;
- confirm aspects of compliance in relation to the system;
- obtain information about deficiencies in the system, or non-compliance with the requirements;
- obtain information about risks or actual failure in the conduct of specific aspects of pharmacovigilance.

The use of this information should contribute to the appropriate management of and improvement(s) to the pharmacovigilance system.

The requirements for submission of a summary of the marketing authorisation holder's pharmacovigilance system, provision of the content of pharmacovigilance system master file and the history of changes to the relevant authority(ies) should enable the planning and effective conduct of inspections by national medicines authorities, based on a risk assessment approach.

Responsibilities, in terms of the pharmacovigilance system master file, for marketing authorisation holders and applicants, national medicines authorities are described in detail in Section C.

II.B.2. Registration and maintenance

II.B.2.1. Summary of the applicant's pharmacovigilance system

Except in the situations described in see II.C.2 where the full PSMF (along together with its summary) is requested to be submitted in the marketing authorisation application; only a summary of the applicant's pharmacovigilance system is required to be included in the marketing authorisation application, which shall include the following elements in module 1.8. of the dossier:

- proof that the applicant has at his disposal a qualified person responsible for pharmacovigilance;
- the country in which the qualified person resides and carries out his/her tasks;
- the contact details of the qualified person;
- a statement signed by the applicant to the effect that the applicant has the necessary means to fulfil the pharmacovigilance tasks and responsibilities listed in this GVP modules;
- a reference to the location where the pharmacovigilance system master file for the medicinal product is kept.

For herbal or homeopathic medicinal products, the following requirements apply: to operate a pharmacovigilance system, to prepare, maintain and make available on request at any time a pharmacovigilance system master file and to submit a summary of the pharmacovigilance system/ full PSMF as appropriate.

II.B.2.2. Location

The pharmacovigilance system master file shall be located either at the site where the main pharmacovigilance activities are performed or at the site where the qualified person responsible for pharmacovigilance operates, irrespective of the format (paper-based or electronic format file). Based on this rule, the PSMF shall be located in the Arab Country concerned, an exception is in the situation where the main activities take place outside the Arab Country concerned (e.g. multinational MAHs/applicants), the location should default to the site where the QPPV operates or where the main pharmacovigilance activities are performed (e.g. located in the country of headquarter) provided that:

- the PSMF is made available to the national medicines authority in the Arab Country concerned at any time; and
- the local office/ affiliate of the MAH/applicant has detailed description on the pharmacovigilance system/ activities on the local level

Details about the location of the pharmacovigilance system master file are required to be notified to the national medicines authority, and any change to the location shall be notified immediately to the national medicines authority in order to have the information updated. The required location information for the PSMF is a physical office address of the marketing authorisation holder or a contracted third party. Where the pharmacovigilance system master file is held in electronic form, the location stated must be a site where the data stored can be directly accessed, and this is sufficient in terms of a practical electronic location.

When determining the main site of pharmacovigilance activity, the marketing authorisation holder should consider the most relevant site for the pharmacovigilance system as a whole, since the relative importance of particular activities may vary according to products and fluctuate in the short term. The marketing authorisation holder should have an appropriate rationale for the location decision.

In the situation where a main site cannot be determined, the location should default to the site where the QPPV operates.

II.B.2.3. Registration

Each national medicines authority in the Arab Countries should manage a national list/database which provides a practical mechanism for maintaining up-to-date information about the MAH's (or contractual partner) pharmacovigilance system master file, its status, its location, the QPPV&/or LSR contact information and the products relevant to the pharmacovigilance system described in the pharmacovigilance system master file.

All pharmacovigilance system master files must be registered at the national medicines authority in the relevant Arab Country in this list/database. The MAH shall submit for such registration. In

addition, the MAH shall notify national medicines authorities to update the database with the location of the pharmacovigilance system master file for each product, and update the information immediately upon change.

II.B.2.4. Transfers of responsibilities for the PSMF

The pharmacovigilance system may change with time. Transfer or delegation of responsibilities and activities concerning the master file should be documented (see II.B.4.2. and II.B.4.8.) and managed to ensure that the marketing authorisation holders fulfil their responsibilities. Since a specific QPPV has responsibility for the pharmacovigilance system, changes to the pharmacovigilance system master file should also be notified to the QPPV in order to support their authority to make improvements to the system. The types of changes that should be routinely and promptly notified to the QPPV are:

- Updates to the pharmacovigilance system master file or its location that are notified to the national medicines authorities;
- The addition of corrective and/or preventative actions to the pharmacovigilance system master file (e.g. following audits and inspections). The QPPV should also be able to access information about deviations from the processes defined in the quality management system for pharmacovigilance;
- Changes to content that fulfil the criteria for appropriate oversight of the pharmacovigilance system (in terms of capacity, functioning and compliance);
- Changes in arrangements for the provision of the pharmacovigilance system master file to national medicines authorities;
- Transfer of significant services for pharmacovigilance to a third party (e.g. outsourcing of PSUR production);
- Inclusion of products into the pharmacovigilance system for which the QPPV is responsible;
- Changes for existing products which may require a change or increased workload in relation to pharmacovigilance activity e.g. new indications, studies or the addition of territories.

Any recipient QPPV should explicitly accept the following changes in writing:

- Transfer of responsibility for a pharmacovigilance system to a QPPV.

The QPPV should be in a position to ensure and to verify that the information contained in the pharmacovigilance system master file is an accurate and up to date reflection of the pharmacovigilance system under his/her responsibility (see Module I).

II.B.3. The representation of pharmacovigilance systems

The pharmacovigilance system master file: A detailed description of the pharmacovigilance system used by the marketing authorisation holder with respect to one or more authorised medicinal products. It shall describe the pharmacovigilance system for one or more medicinal products of the marketing authorisation holder. For different categories of medicinal products the marketing authorisation holder may, if appropriate, apply separate pharmacovigilance systems. Each such

system shall be described in a separate pharmacovigilance system master file. Those files shall cumulatively cover all medicinal products of the marketing authorisation holder for which a marketing authorisation has been granted.

- It is anticipated that there will be circumstances where a single marketing authorisation holder may establish more than one pharmacovigilance system e.g. specific systems for particular types of products (vaccines, consumer health, etc.), or that the pharmacovigilance system may include products from more than one marketing authorisation holder. In either case, a single and specific pharmacovigilance system master file shall be in place to describe each system.
- A single QPPV shall be appointed to be responsible for the establishment and maintenance of the pharmacovigilance system described in the pharmacovigilance system master file.
- Where a pharmacovigilance system is shared by several marketing authorisation holders each marketing authorisation holder is responsible ensuring that a pharmacovigilance system master file exists to describe the pharmacovigilance system applicable for his products. For a particular product(s) the marketing authorisation holder may delegate through written agreement (e.g. to a licensing partner or contractor) part or all of the pharmacovigilance activity for which the marketing authorisation holder is responsible. In this case the pharmacovigilance system master file of the marketing authorisation holder may cross refer to all or part of the pharmacovigilance system master file managed by the system of the party to whom the activity has been delegated subject to agreement on access to that system's information for the marketing authorisation holder and the authorities. The marketing authorisation holder should be able to assure the content of the referenced file(s) in relation to the pharmacovigilance system applicable to their product(s). Activities for maintaining the pharmacovigilance system master file in a current and accessible state can be delegated.
- Where applicable, a list of all pharmacovigilance system master files held by the same marketing authorisation holder shall be provided in the annex (see II.B.4.8.); this includes their location(s), details of the responsible QPPV(s) and the relevant product(s).
- Submission of summary information to national medicines authorities cannot contain multiple locations for a single pharmacovigilance system master file. The address of the location of the pharmacovigilance system master file provided should be an office address which reflects either the site where the main pharmacovigilance activities of the marketing authorisation holder are performed or the site where the qualified person responsible for pharmacovigilance operates. This address may be different to that of the applicant/marketing authorisation holder, for example, a different office of the marketing authorisation holder or when a third party undertakes the main activities.
- Similarly, the QPPV details aligned to a product may be those of a contract QPPV responsible for the pharmacovigilance system for a particular medicinal product, and not necessarily a QPPV directly employed by the marketing authorisation holder.
- When delegating any activities concerning the pharmacovigilance system and its master file, the marketing authorisation holder retains ultimate responsibility for the pharmacovigilance system, for ensuring submission of information about the pharmacovigilance system master file location, maintenance of the pharmacovigilance system master file and its provision to national medicines authorities upon request. Detailed written agreements describing the roles and responsibilities for

pharmacovigilance system master file content, submissions and management, as well as to govern the conduct of pharmacovigilance in accordance with the legal requirements, should be in place.

- When a pharmacovigilance system is shared, it is advised that the partners agree on how to mutually maintain the relevant sections within their own pharmacovigilance system master files. Accessibility of the pharmacovigilance system master file to all the applicable marketing authorisation holder(s), and its provision to national medicines authorities should be defined in written agreements. It is vital that marketing authorisation holder(s) can gain assurance that the pharmacovigilance system used for its products is appropriate and compliant.

II.B.4. Information to be contained in the PSMF

The pharmacovigilance system master file shall contain at least all of the documents described in the following subsections.

The pharmacovigilance system master file shall include documents to describe the pharmacovigilance system. The content of the pharmacovigilance system master file should reflect the global availability of safety information for medicinal products authorised in the Arab Country concerned. The content shall be indexed to allow for efficient navigation around the document and follow the modular system described in the following sections and the annex headings described in II.B.6.1. The main principle for the structure of the content of the pharmacovigilance system master file is that the primary topic sections contain information that is fundamental to the description of pharmacovigilance system. Detailed information is required to fully describe the system, and, since this may change frequently, it should be referred to and contained in the Annexes. The control associated with change of content is described in section II.B.5.

It is accepted that, where no marketing authorisation (and master file) previously existed in the Arab Country concerned, there may be information that cannot be initially provided, for example, compliance information, however, descriptions of what will be implemented should be provided instead.

II.B.4.1. PSMF section on qualified person responsible for pharmacovigilance (QPPV)

For the QPPV, contact details shall be provided in the marketing authorisation application.

The information relating to the QPPV provided in the PSMF shall include:

- a description of the responsibilities guaranteeing that the qualified person has sufficient authority over the pharmacovigilance system in order to promote, maintain and improve compliance;
- a summary curriculum vitae with the key information on the role of the qualified person responsible for pharmacovigilance;
- contact details;
- details of back-up arrangements to apply in the absence of the qualified person responsible for pharmacovigilance; and

- **checklist** on the following required practical experience/ trainings. Taking into consideration that pharmacovigilance practice and regulations are relatively new in the Arab Countries, thus having an experienced QPPV may be challenging. Accordingly, it is accepted by the national medicines authorities in the Arab Countries **that for only a transitional period** the QPPV qualifications may be expressed in terms of his pharmacovigilance training rather than his practical experience in pharmacovigilance. Under these circumstances, once the QPPV is appointed, the MAH is responsible of providing him the unachieved trainings in light of the checklist below. (Consult with national medicines authority in each Arab Country for transitional period duration & conditions, if any,).

Topic	**Practical experience** * (insert √ or X in the respective field)
▪ Pharmacovigilance methods	
▪ MedDRA coding.	
▪ ICSRs processing activities	
▪ Evidence based –medicine, How to conduct literature search.	
▪ Causality assessment	
▪ Case Narrative Writing for Reporting Adverse Events	
▪ Pharmacovigilance quality management	
▪ Pharmaco-epidemiology	
▪ Biostatiscis	
▪ Signal detection	
▪ Medical Aspects of Adverse Drug Reactions	
▪ Risk benefit assessment in Pharmacovigilance	
▪ National pharmacovigilance regulations	
▪ How to prepare PSUR & Addendum of clinical overview	
▪ Pharmacovigilance Planning and Risk Management Plans	
▪ How to prepare PSMF	
▪ Risk communication, DHPC	

* during the transitional period: add 3rd column to highlight the trainings; the table header will be as follow (insert √ or X in the respective field):

Topic	Practical experience	Training
▪		
▪		

- for multinational MAH/ applicant; information relating to the contact person for pharmacovigilance (local safety responsible, LSR) nominated at national level, including contact details.

A list of tasks that have been delegated by the qualified person for pharmacovigilance shall also be included in the Annexes (see II.B.4.8.). This should outline the activities that are delegated and to whom, and include the access to a medically qualified person if applicable. This list may be supplied as a copy of a written procedural document provided the required content is covered.

The details provided in relation to the QPPV should also include the description of the QPPV qualifications, experience and registrations relevant to pharmacovigilance. The contact details supplied should include name, postal, telephone, fax and e-mail and represent the usual working address of the QPPV, which may therefore be different to a marketing authorisation holder address. If the QPPV is employed by a third party, even if the usual working address is an office of the marketing authorisation holder, this should be indicated and the name of the company the QPPV works for provided.

II.B.4.2. PSMF section on the organisational structure of the marketing authorisation holder

- A description of the organisational structure of the marketing authorisation holder relevant to the pharmacovigilance system must be provided. The description should provide a clear overview of the company(ies) involved, the main pharmacovigilance departments and the relationship(s) between organisations and operational units relevant to the fulfilment of pharmacovigilance obligations. This should include third parties. Specifically, the pharmacovigilance system master file shall describe:
  - The organisational structure of the marketing authorisation holder(s), showing the position of the QPPV in the organisation.
  - The site(s) where the pharmacovigilance functions are undertaken covering individual case safety report collection, evaluation, safety database case entry, periodic safety update report production, signal detection and analysis, risk management plan management, pre- and post-authorisation study management, and management of safety variations.

  Diagrams may be particularly useful; the name of the department or third party should be indicated.

- Delegated activities

  The pharmacovigilance system master file, where applicable, shall contain a description of the delegated activities and/or services relating to the fulfillment of pharmacovigilance obligations. This includes arrangements with other parties in any country, Worldwide and if applicable, to the pharmacovigilance system applied to products authorised in the Arab Country concerned.

  Links with other organisations, such as co-marketing agreements and contracting of pharmacovigilance activities should be outlined. A description of the location and nature of contracts and agreements relating to the fulfilment of pharmacovigilance obligations should be provided. This may be in the form of a **list/table** to show the parties involved, the roles undertaken and the concerned product(s) and territories. The list should be organised according to; service providers (e.g. medical information, auditors, patient support programme providers, study data management etc.), commercial arrangements (distributors, licensing partners, co-marketing etc.) and other technical providers (hosting of computer systems etc.). Individual contractual agreements should be annexed with the PSMF when the later is submitted. Individual contractual agreements shall be made available at the request of national medicines authorities at any time or during inspection and audit and the list provided in the Annexes (see II.B.4.8.).

II.B.4.3. PSMF section on the sources of safety data

The description of the main units for safety data collection should include all parties responsible, on a global basis, for solicited and spontaneous case collection for products authorised in the Arab Country concerned. This should include medical information sites as well as affiliate offices and may take the form of a list describing the country, nature of the activity and the product(s) (if the activity is product specific) and providing a contact point (address, telephone and e-mail) for the site. The list may be located in the Annexes of the pharmacovigilance system master file. Information about third parties (licence partners or local distribution/marketing arrangements) should also be included in the section describing contracts and agreements (see II.B.4.2. and II.B.4.8.).

Description supported by **Flow diagrams** shall be used to indicate the main stages, timeframes and parties involved. However represented, the description of the process for ICSRs from collection to reporting to national medicines authorities should indicate the departments and/or third parties involved.

For the purposes of inspection and audit of the pharmacovigilance system, sources include data arising from study sources, including any studies, registries, surveillance or support programmes sponsored by the marketing authorisation holder through which ICSRs could be reported. MAHs should be able to produce and make available a list of such sources to support inspection, audit and QPPV oversight. It is recommended that the list should be comprehensive for products authorised in the Arab Country concerned, irrespective of indication, product presentation or route of administration. The list should describe, on a worldwide basis, the status of each study/programme, the applicable country(ies), the product(s) and the main objective. It should distinguish between interventional and non-interventional studies and should be organised per active substance. The list should be comprehensive for all studies/programmes and should include ongoing studies/programmes as well as studies/programmes completed in the last two years and may be

located in an Annex or provided separately.

II.B.4.4. PSMF section on computerised systems and databases

The location, functionality and operational responsibility for computerised systems and databases used to receive, collate, record and report safety information and an assessment of their fitness for purpose shall be described in the pharmacovigilance system master file.

Where multiple computerised systems/databases are used, the applicability of these to pharmacovigilance activities should be described in such a way that a clear overview of the extent of computerisation within the pharmacovigilance system can be understood. The validation status of key aspects of computer system functionality should also be described; the change control, nature of testing, back-up procedures and electronic data repositories vital to pharmacovigilance compliance should be included in summary, and the nature of the documentation available described. For non-electronic systems (where an electronic system may only be used for expedited submission of ICSRs), the management of the data, and mechanisms used to assure the integrity and accessibility of the safety data, and in particular the collation of information about adverse drug reactions, should be described.

II.B.4.5. PSMF section on pharmacovigilance processes

An essential element of any pharmacovigilance system is that there are clear written procedures in place. Module I describes the required minimum set of written procedures for pharmacovigilance. A **description** of the procedural documentation available (standard operating procedures, manuals, at a global and/or national level etc.), the nature of the data held (e.g. the type of case data retained for ICSRs) and an indication of how records are held (e.g. safety database, paper file at site of receipt) should be provided in the pharmacovigilance system master file.

A description of the process, data handling and records for the performance of pharmacovigilance, covering the following aspects shall be included in the pharmacovigilance system master file:

- Continuous monitoring of product risk-benefit profile(s) applied and the result of evaluation and the decision making process for taking appropriate measures; this should include signal generation, detection and evaluation. This may also include several written procedures and instructions concerning safety database outputs, interactions with clinical departments etc;
- Risk management system(s) and monitoring of the outcome of risk minimisation measures; several departments may be involved in this area and interactions should be defined in written procedures or agreements;
- ICSR collection, collation, follow-up, assessment and reporting; the procedures applied to this area should clarify what are local and what are global activities;
- PSUR scheduling, production and submission, (see Module VII);
- Communication of safety concerns to consumers, healthcare professionals and the national medicines authorities;
- Implementation of safety variations to the summary of product characteristics (SmPC) and patient information leaflets; procedures should cover both internal and external communications.

In each area, the marketing authorisation holder should be able to provide **evidence** of a system that supports appropriate and timely decision making and action.

The description must be accompanied by the **list** of the following **processes for compliance management**, as well as interfaces with other functions:

1. the continuous monitoring of pharmacovigilance data, the examination of options for risk minimisation and prevention and appropriate measures are taken by the marketing authorisation holder;
2. the scientific evaluation by the marketing authorisation holder of all information on the risks of medicinal products;
3. the submission of accurate and verifiable data on serious and non-serious adverse reactions to the national medicines authorities within the time limits provided in the national regulations;
4. the quality, integrity and completeness of the information submitted on the risks of medicinal products, including processes to avoid duplicate submissions and to validate signals;
5. effective communication by the marketing authorisation holder with the national medicines authorities, including communication on new risks or changed risks, the pharmacovigilance system master file, risk management systems, risk minimisation measures, periodic safety update reports, corrective and preventive actions, and post-authorisation studies;
6. the update of product information by the marketing authorisation holder in the light of scientific knowledge, and on the basis of a continuous monitoring by the marketing authorisation holder of information released by the national medicines authorities;
7. appropriate communication by the marketing authorisation holder of relevant safety information to healthcare professionals and patients.

These interfaces with other functions include, but are not limited to, the roles and responsibilities of the QPPV, responding to national medicines authority requests for information, literature searching, safety database change control, safety data exchange agreements, safety data archiving, pharmacovigilance auditing, quality control and training. The list, which may be located in the Annexes, should comprise **in cross matching** with each one of the topics highlighted above in this section the topic name, procedural document reference number, title, effective date and document type (for all standard operating procedures, work instructions, manuals etc.). Procedures belonging to service providers and other third parties should be clearly identified. Documents relating to specific local/country procedures need not be listed, but a list may be requested on a per country basis. If no or only some countries use specific local procedures, this should be indicated (and the names of the applicable countries provided).

II.B.4.6. PSMF section on pharmacovigilance system performance

The pharmacovigilance system master file should contain evidence of the ongoing monitoring of performance of the pharmacovigilance system including compliance of the main outputs of pharmacovigilance. The pharmacovigilance system master file should include a description of the monitoring methods applied and contain as a minimum:

- An explanation of how the correct reporting of ICSRs is assessed. In the annex, figures/graphs

should be provided to show the timeliness of 15-day and 90-day reporting over the past year;

- A description of any metrics used to monitor the quality of submissions and performance of pharmacovigilance. This should include information provided by national medicines authorities regarding the quality of ICSR reporting, PSURs or other submissions;
- An overview of the timeliness of PSUR reporting to national medicines authorities in the Arab Country concerned (the annex should reflect the latest figures used by the marketing authorisation holder to assess compliance);
- An overview of the methods used to ensure timeliness of safety variation submissions compared to internal and national medicines authority deadlines, including the tracking of required safety variations that have been identified but not yet been submitted;
- Where applicable, an overview of adherence to risk management plan commitments, or other obligations or conditions of marketing authorisation(s) relevant to pharmacovigilance.

Targets for the performance of the pharmacovigilance system shall be described and explained. A list of performance indicators must be provided in the Annex to the pharmacovigilance system master file, alongside the results of (actual) performance measurements.

II.B.4.7. PSMF section on quality system

A description of the quality management system should be provided, in terms of the structure of the organisation and the application of the quality to pharmacovigilance. This shall include:

Document and Record Control

Provide a description of the archiving arrangements for electronic and/or hardcopy versions of the different types records and documents for pharmacovigilance and quality system(see also Module I)

Procedural documents

- A general description of the types of documents used in pharmacovigilance (standards, operating procedures, work instructions etc), the applicability of the various documents at global, regional or local level within the organisation, and the controls that are applied to their accessibility, implementation and maintenance.
- Information about the documentation systems applied to relevant procedural documents under the control of third parties.

A list of specific procedures and processes related to the pharmacovigilance activities and interfaces with other functions, with details of how the procedures can be accessed must be provided, and the detailed guidance for the inclusion of these is in section II.B.4.5.

Training

Staff should be appropriately trained for performing pharmacovigilance related activities and this includes not only staff within pharmacovigilance departments but also any individual that may receive safety reports.

- A description of the resource management for the performance of pharmacovigilance activities:

- the organisational chart giving the number of people (full time equivalents) involved in pharmacovigilance activities, which may be provided in the section describing the organisational structure (see II.B.4.3)

- Information about sites where the personnel are located (this is described under sections II.B.4.2 and II.B.4.3) whereby the sites are provided in the PSMF in relation to the organisation of specific pharmacovigilance activities and in the Annexes which provide the list of site contacts for sources of safety data. However, a description should be provided in order to explain the training organisation in relation to the personnel and site information;
- A summary description of the training concept, including a reference to the location training files, record as well as the trainings materials.

Auditing

Information about quality assurance auditing of the pharmacovigilance system should be included in the pharmacovigilance system master file. A description of the approach used to plan audits of the pharmacovigilance system and the reporting mechanism and timelines should be provided, with a current list of the scheduled and completed audits concerning the pharmacovigilance system maintained in the annex referred to II.B.4.8.. This list should describe the date(s) (of conduct and of report), scope and completion status of audits of service providers, specific pharmacovigilance activities or sites undertaking pharmacovigilance and their operational interfaces relevant to the fulfilment of the pharmacovigilance obligations, and cover a rolling 5 year period.

The pharmacovigilance system master file shall also contain a note associated with any audit where significant findings are raised. This means that the presence of findings that fulfil the national criteria for major or critical findings must be indicated (see Module IV). The audit report must be documented within the quality system; in the pharmacovigilance system master file it is sufficient to provide a brief description of the corrective and/or preventative action(s) associated with the significant finding, the date it was identified and the anticipated resolution date(s), with cross reference to the audit report and the documented corrective and preventative action plan(s). In the annex, in the list of audits conducted, those associated with unresolved notes in the pharmacovigilance system master file, should be identified. The note and associated corrective and preventative action(s), shall be documented in the pharmacovigilance system master file until the corrective and/or preventative action(s) have been fully implemented, that is, the note is only removed once corrective action and/or sufficient improvement can be demonstrated or has been independently verified. The addition, amendment or removal of the notes must therefore be recorded in the logbook.

As a means of managing the pharmacovigilance system, and providing a basis for audit or inspection, the pharmacovigilance system master file should also describe the process for recording, managing and resolving deviations from the quality system. The master file shall also document deviations from pharmacovigilance procedures, their impact and management until resolved. This may be documented in the form of a list referencing a deviation report, and its date and procedure concerned.

II.B.4.8. Annex to the PSMF

An annex to the pharmacovigilance system master file shall contain the following documents:

- A list of medicinal products covered by the pharmacovigilance system master file including the name of the medicinal product, the name of the active substance(s), and the Arab Country (ies) in which the authorisation is valid;

  The list of medicinal products authorised in the Arab Country (ies) should also include the authorisation number(s) including:

  - the presence on the market in the Arab Country(ies) stated in the list (marketing status);
  - other non-Arab countries where the product is authorised or on the market.

  The list should be organised per active substance and, where applicable, should indicate what type of product specific safety monitoring requirements exist (for example risk minimisation measures contained in the risk management plan or laid down as conditions of the marketing authorisation, non-standard PSUR periodicity. The monitoring information may be provided as a secondary list.

  For marketing authorisations that are included in a different pharmacovigilance system; for example, because the MAH has more than one pharmacovigilance system or third party agreements exist to delegate the system, reference to the additional pharmacovigilance system master file(s) should also be provided as a separate list in the Annexes, such that, for a MAH, the entire product portfolio can be related to the set of pharmacovigilance system master files.

  Where pharmacovigilance systems are shared, all products that utilise the pharmacovigilance system should be included, so that the entire list of products covered by the file is available. The products lists may be presented separately, organised per MAH. Alternatively, a single list may be used, which is supplemented with the name of the MAH(s) for each product, or a separate note can be included to describe the product(s) and the MAH(s) covered;

- A list of written policies and procedures for the compliance management (see II.B.4.5.);
- A list of contractual agreements covering delegated activities including the medicinal products and territory(ies) concerned. In addition, a copy of the individual contractual agreements relevant to the Arab Country concerned shall also be included in this annex when the PSMF is submitted to the national medicines authorities;
- A list of tasks that have been delegated by the qualified person for pharmacovigilance;
- A list of all completed audits, for a period of five years, and a list of audit schedules;
- Where applicable, a list of performance indicators (see II.B.4.6.);
- Where applicable, a list of other pharmacovigilance system master files held by the same marketing authorisation holder;

  This list should include the pharmacovigilance system master file number(s), and the name of MAH of the QPPV responsible for the pharmacovigilance system used. If the pharmacovigilance system is managed by another party that is not a marketing authorisation holder, the name of the service provider should also be included.

- A logbook of any change of the content of the pharmacovigilance system master file made within the last five years except the changes in annexes and the following QPPV information: CV, contact details, back-up arrangements and contact person for pharmacovigilance on the national level. .In addition, other change control documentation should be included as appropriate. Documented changes shall include at least the date, person responsible for the change and the nature of the change.

II.B.5 Change control, logbook, versions and archiving

It is necessary for marketing authorisation holders to implement change control systems and to have robust processes in place to continuously be informed of relevant changes in order to maintain the pharmacovigilance system master file accordingly. The national medicines authorities may solicit information about important changes to the pharmacovigilance system, such as, but not limited to:

- Changes to the pharmacovigilance safety database(s), which could include a change in the database itself or associated databases, the validation status of the database as well as information about transferred or migrated data;
- Changes in the provision of significant services for pharmacovigilance, especially major contractual arrangements concerning the reporting of safety data;
- Organisational changes, such as takeovers, mergers, the sites at which pharmacovigilance is conducted or the delegation/transfer of pharmacovigilance system master file management.

In addition to these changes being documented in the pharmacovigilance system master file for the purpose of change control (in the logbook), the QPPV should always been kept informed of these changes.

Changes to the pharmacovigilance system master file should be recorded, such that a history of changes is available (specifying the date and the nature of the change), descriptive changes to the PSMF must be recorded in a logbook.

Change history for the information contained in the Annexes may be ‘on demand’, in which case the logbook would indicate the date of the revision of PSMF content and/or Annex update(s), the history of changes for Annex content would also be updated. Information that is being regularly updated and is contained in the Annexes, such as product and standard operating procedure lists or compliance figures, may include outputs from controlled systems (such as electronic document management systems or regulatory databases). The superseded versions of such content may be managed outside of the pharmacovigilance system master file content itself, provided that the history of changes is maintained and available to national medicines authorities on request. If the pharmacovigilance system master file has not been requested, or has remained unchanged for a period of time (for example, if the changes in the content of Annexes are managed outside of the pharmacovigilance system master file), it is recommended that a review is conducted periodically. Marketing authorisations holders need to ensure that the obligations concerning the timely provision of the pharmacovigilance system master file can be met. It is also noted that the QPPV must be able to gain access to current and accurate information about the pharmacovigilance system, hence permanent access to the pharmacovigilance system master file must be enabled, including the information contained in the Annexes (either via the pharmacovigilance master file

itself or via access to the systems used to generate the Annex content).

Marketing authorisation holders should be able to justify their approach and have document control procedures in place to govern the maintenance of the pharmacovigilance system master file. As a basis for audit and inspections, the pharmacovigilance system master file provides a description of the pharmacovigilance system at the current time, but the functioning and scope of the pharmacovigilance system in the past may need to be understood.

Changes to the pharmacovigilance system master file should also account for shared pharmacovigilance systems and delegated activities. A record of the date and nature of notifications of the changes made available to the national medicines authorities, the QPPV and relevant third parties should be kept in order to ensure that change control is fully implemented.

The pharmacovigilance system master file should be retained in a manner that ensures its legibility and accessibility.

II.B.6. Pharmacovigilance system master file presentation

The pharmacovigilance system master file shall be continuously accessible to the QPPV and to the national medicines authorities on request. The information shall be succinct, accurate and reflect the current system in place, which means that whatever format is used, it must be possible to keep the information up to date and, when necessary, to revise to take account of experience gained, technical and scientific progress and amendments to the legislative requirements. Although provision of the document within 14 days of request by a national medicines authority is required, marketing authorisation holders should be aware that immediate access to the pharmacovigilance system master file may also be required by the national medicines authorities, at the stated pharmacovigilance system master file location or QPPV site (if different).

II.B.6.1. Format and layout

The pharmacovigilance system master file may be in electronic form on condition that a clearly arranged printed copy can be made available to national medicines authorities if requested. In any format, the pharmacovigilance system master file should be legible, complete, provided in a manner that ensures all documentation is accessible and allow full traceability of changes. Therefore, it may be appropriate to restrict access to the pharmacovigilance system master file in order to ensure appropriate control over the content and to assign specific responsibilities for the management of pharmacovigilance system master file in terms of change control and archiving.

The pharmacovigilance system master file should be written in English (unless otherwise is requested by the national medicines authority in the Arab Country concerned), indexed in a manner consistent with the headings described in this Module, and allow easy navigation to the contents. In general, embedded documents are discouraged. The use of electronic book-marking and searchable text is recommended. Documents such as copies of signed statements or agreements should be included as appendices and described in the index.

The documents and particulars of the pharmacovigilance system master file shall be presented with the following headings and, if hardcopy, in the order outlined:

Cover Page to include:

- The unique number assigned by the national medicines authority to the pharmacovigilance system master file (if applicable).
- The name of the MAH, the MAH of the QPPV responsible for the pharmacovigilance system described (if different), as well as the relevant QPPV third party company name (if applicable).
- The name of other concerned MAH(s) (sharing the pharmacovigilance system)
- The list of pharmacovigilance system master files for the MAH (concerning products with a different pharmacovigilance system)
- The date of preparation / last update

The headings used in II.B.4 should be used for the main content of the pharmacovigilance system master file. The minimum required content of the Annexes is outlined in II.B.4.8, and additional information may be included in the Annexes, provided that the requirements for the content of the main sections (II.B.1-7) are also met. The positioning of content in the Annexes is further outlined; the bulleted points are descriptions of possible content (and not required headings):

The Qualified Person responsible for pharmacovigilance, Annex A

- The list of tasks that have been delegated by the QPPV, or the applicable procedural document
- The curriculum vitae of the QPPV and associated documents
- Contact details

The Organisational Structure of the MAH, Annex B

- The lists of contracts and agreements
- a copy of the individual contractual agreements relevant to the Arab Country concerned

Sources of safety data, Annex C

- Lists associated with the description of sources of safety data e.g. affiliates and third party contacts

Computerised systems and Databases, Annex D

Pharmacovigilance Process, and written procedures, Annex E

- Lists of procedural documents

Pharmacovigilance System Performance, Annex F

- Lists of performance indicators
- Current results of performance assessment in relation to the indicators

Quality System, Annex G

- Audit schedules
- List of audits conducted and completed

Products, Annex H

- List(s) of products covered by the pharmacovigilance system
- Any notes concerning the MAH per product

Document and Record Control, Annex I

- Logbook
- Documentation of history of changes for Annex contents, indexed according to the Annexes A-H and their content if not provided within the relevant annex itself

Documentation to support notifications and signatures concerning the pharmacovigilance system master file, as required. Where there is no content for an Annex, there is no need to provide blank content pages with headings, however, the Annexes that are provided should still be named according to the format described. For example, Annex E should **NOT** be renamed to Annex D in circumstances where no Annex concerning computerised systems and databases is used, Annex D should simply be described as 'unused' in the indexing, in order that recipients of the pharmacovigilance system master file are assured that missing content is intended.

II.C. Operation in the Arab Countries

II.C.1. Responsibilities

II.C.1.1. Marketing authorisation holders and applicants

Marketing authorisation holders shall have a pharmacovigilance system in place to ensure the monitoring and supervision of one or more medicinal products. They are also responsible for introducing and maintaining a pharmacovigilance system master file that records the pharmacovigilance system in place with regard to one or more authorised products. A single QPPV shall be appointed to be responsible for the establishment and maintenance of the pharmacovigilance system described in the pharmacovigilance system master file.

Applicants are required, at the time of initial marketing authorisation application, to have in place a description of the pharmacovigilance system that records the system that will be in place and functioning at the time of grant of the marketing authorisation and placing of the product on the market. During the evaluation of a marketing authorisation application the applicant may be requested to provide a copy of the pharmacovigilance system master file for review see II.C.2.

The applicant/marketing authorisation holder is responsible for establishing the pharmacovigilance system master file (at any marketing authorisation holder or contractual partner site including the site of a contractor or marketing partner), and to submit for registering its PSMF with the national medicines authority in the national pharmacovigilance systems list/database. The pharmacovigilance system master file shall describe the pharmacovigilance system in place at the current time. Information about elements of the system to be implemented in future may be included, but these should be clearly described as planned rather than established or current.

The pharmacovigilance system master file creation, maintenance in a current and accessible state (permanently available for audit and inspection purposes) and provision to national medicines authorities can be outsourced to a third party, but the marketing authorisation holder retains ultimate responsibility for compliance with the legal requirements.

When the QPPV/LSR and related contact details change or when the location of the pharmacovigilance system master file changes, the marketing authorisation holder is required to notify/submit the appropriate variation application(s) to the national medicines authorities as applicable.

II.C.1.2. National medicines authorities

The national medicines authorities are obliged to supervise the pharmacovigilance systems of marketing authorisation holders. As part of this requirement, they will review the summary information about the pharmacovigilance system (& full PSMF as appropriate) included in the marketing authorisation application. The full pharmacovigilance system master file may also be requested at any time, for example, to review the description of a pharmacovigilance system of an applicant that has not previously held a marketing authorisation in the Arab Country concerned or where specific concerns about the pharmacovigilance system and/or the product safety profile exist, and in preparation for an inspection (see Module III). Information concerning changes to the summary information or content of the pharmacovigilance system master file will also be used to inform inspection planning and conduct.

In each national medicine authority information about pharmacovigilance systems will be used to inform national risk-based pharmacovigilance inspection programmes. Pharmacovigilance inspectors will report non-compliance with the requirements of legislation and guidance, including both non-compliance with the requirements for the pharmacovigilance system master file and the pharmacovigilance system (see Module III).

Each national medicines authority in the Arab Countries should manage a national list/database which provides a practical mechanism for maintaining up-to-date information about the MAH's or contractual partner pharmacovigilance system master file, its status, its location, the QPPV&/or LSR contact information and the products relevant to the pharmacovigilance system described in the pharmacovigilance system master file.

II.C.2. Accessibility/ submission of the pharmacovigilance system master file

The pharmacovigilance system master file shall be maintained in a current state and be permanently available to the QPPV. It shall also be permanently available for inspection, at the site where it is kept (the stated location), irrespective of whether the inspection has been notified in advance or is unannounced.

The marketing authorisation holder shall maintain and make available on request a copy of the pharmacovigilance system master file. The marketing authorisation holder must submit the copy within 14 days after receipt of the request from the national medicines authority in the Arab Countries concerned (unless otherwise stated in the request). The pharmacovigilance system master file should be submitted in a readable electronic format or clearly arranged printed copy. When the

MAH/applicant has not previously submit the PSMF in the Arab Country concerned or is in the process of establishing a new pharmacovigilance system; the first PSMF submission should be accompanied by the complete version of pharmacovigilance SOPs.

In the situation where the same pharmacovigilance system master file is used by more than one marketing authorisation holder (where a common pharmacovigilance system is used) the concerned pharmacovigilance system master file should be accessible to each, as any of the applicable marketing authorisation holders shall be able to provide the file to the medicines authorities within 14 days, upon request (unless otherwise stated in the request).

The full PSMF (along together with its summary) is requested to be submitted in the marketing authorisation applications (i.e. pre-authorisation) in the following situations:

- the applicant has not previously held a marketing authorisation in the Arab Country concerned, full PSMF is appropriate to review the description of a pharmacovigilance system;
- the applicant has not previously submit the PSMF in the Arab Country concerned or is in the process of establishing a new pharmacovigilance system;
- the applicant had major changes in its organisation, such as mergers and acquisitions or in its pharmacovigilance system
- the applicant has major or critical findings in the previous pharmacovigilance system assessment by the national medicines authority;
- the applicant has a history or culture of pharmacovigilance non-compliance; previous information (e.g. inspection history and non-compliance notifications or information from other authorities). In addition to the submission of the full PSMF, if the marketing authorisation holder has a history of serious and/or persistent pharmacovigilance non-compliance, a pre-authorisation pharmacovigilance inspection may be one mechanism to confirm that improvements have been made to the system before a new authorisation is granted (see module III);
- where specific concerns about the pharmacovigilance system and/or the product safety profile exist;
- any other situation as seen appropriate by the national medicines authority;

Except in the above situations, the pharmacovigilance system master file should not routinely be requested during the assessment of new marketing authorisation applications (i.e. pre-authorisation), but may be requested on an **ad hoc basis**, particularly if a new pharmacovigilance system is being implemented, or if product specific safety concerns or issues with compliance with pharmacovigilance requirements have been identified or in preparation for an pharmacovigilance inspection.

II.C.3. Special considerations for the multinational MAHs/applicants

All MAHs must have an appropriate system of pharmacovigilance in place. It is understood that for Multinational MAH/Applicant; the Pharmacovigilance activities in the Arab country concerned functions as a part or sub-system of its global pharmacovigilance system and integrate with it.

The content of the pharmacovigilance system master file should reflect **global** availability of safety

information for medicinal products authorised for the MAH, with information on the pharmacovigilance system to the local or regional activities. Despite this fact, pharmacovigilance activities on the national level as described in the PSMF may not be applied to the same extent by all the MAH's national offices/ affiliates, furthermore, some additional national requirements and details may also apply. Accordingly, multinational MAHs/Applicants should provide clear illustration of the key elements of both global pharmacovigilance system and national pharmacovigilance sub-system, highlighting the role of LSR, which pharmacovigilance activities are carried out in the Arab Country concerned, which are carried out in the headquarter/globally and how they integrate together.

For the Multinational MAH/Applicant the following two documents are required (for submission requirement see II.C.3.5.):

1. **The PSMF** (according to European Good Pharmacovigilance Practice which is the base for this guideline) and,
2. **National pharmacovigilance sub-system file (national PSSF)** which describes the key elements of pharmacovigilance activities in the Arab County concerned.

II.C.3.1. The PSMF general consideration

The content of the PSMF is accepted to be according to European Good Pharmacovigilance Practice which is the base for this guideline. All the regulations described above in this module apply to the PSMF of the multinational MAH/applicant.

II.C.3.2. The information to be contained in the national PSSF

The national pharmacovigilance sub-system file (national PSSF) shall include information and documents to describe the pharmacovigilance sub-system at the national level in the Arab country concerned. The content of the national PSSF shall be indexed to allow for efficient navigation around the document and follow the modular system described in the following sections and the annex. The national PSSF shall be maintained in a current state and be permanently available to the LSR.

The registration and continuous maintenance described in the II.B.2. apply. The control associated with change of content as described in section II.B.5. apply.

II.C.3.2.1. National PSSF section on "local safety responsible (LSR)"

Remember that the information provided in this section of the national PSSF shall focus on the national pharmacovigilance sub-system

For the LSR, contact details shall be provided in the marketing authorisation application.

The information relating to the LSR provided in the national PSSF shall include:

- a description of the LSR responsibilities guaranteeing that the LSR has sufficient authority over the pharmacovigilance activity on the national level in order to promote, maintain and improve compliance with national regulations;
- a summary curriculum vitae with the key information on the role of the LSR;

- contact details;
- details of back-up arrangements to apply in the absence of the LSR;
- **checklist** on the following required practical experience/ trainings:
  Taking into consideration that pharmacovigilance practice and regulations are relatively new in the Arab Countries, thus having an experienced LSR may be challenging. Accordingly, it is accepted by the national medicines authorities in the Arab Countries **that for only a transitional period** the LSR qualifications may be expressed in terms of his pharmacovigilance training rather than his practical experience in pharmacovigilance. Under these circumstances, once the LSR is appointed, the MAH is responsible of providing him the unachieved trainings in light of the check list below. (Consult with national medicines authority in each Arab Country for transitional period duration & conditions, if any,).

Topic	**Practical experience*** (insert √ or X in the respective field)
▪ Pharmacovigilance methods	
▪ MedDRA coding.	
▪ ICSRs processing activities	
▪ Evidence based –medicine, How to conduct literature search.	
▪ Causality assessment	
▪ Case Narrative Writing for Reporting Adverse Events	
▪ Pharmacovigilance quality management	
▪ Introduction to pharmaco-epidemiology	
▪ Biostatiscis	
▪ Basics of signal detection	
▪ Medical Aspects of Adverse Drug Reactions	
▪ Risk benefit assessment in Pharmacovigilance	
▪ National pharmacovigilance regulations	
▪ PSUR overview & national appendix	
▪ RMP overview & National display	
▪ PSMF overview & national PSSF	

Topic	**Practical experience*** (insert √ or X in the respective field)
▪ Risk communication, DHPC	

* during the transitional period: add 3rd column to highlight the trainings the table header will be as follow: (insert √ or X in the respective field)

Topic	Practical experience	Training

If applicable, a list of tasks that have been delegated by the LSR shall also be included in the Annexes (see II.C.3.2.8.). This should outline the activities that are delegated and to whom.

The details provided in relation to the LSR should also include the description of the LSR qualifications, experience and registrations relevant to pharmacovigilance. The contact details supplied should include name, postal, telephone, fax and e-mail and represent the usual working address of the LSR.

II.C.3.2.2. National PSSF section on the "organisational structure of the MAH's local office"

Remember that the information provided in this section of the national PSSF shall focus on the national pharmacovigilance sub-system

- A description of the organisational structure of the MAH's local office relevant to the national pharmacovigilance sub-system must be provided. The description should provide a clear overview of the company(ies) involved, the main pharmacovigilance department and the relationship(s) between organisations and operational units relevant to the fulfilment of pharmacovigilance obligations. This should include third parties. Specifically, the national PSSF shall describe:
  - The organisational structure of the MAH's local office, showing the position of the LSR in the organisation.
  - The site(s) where the pharmacovigilance functions on the national level are undertaken covering individual case safety report collection, evaluation, safety database case entry, periodic safety update report production (integration with global system), signal detection and analysis(integration with global system), risk management plan management, pre- and post-authorisation study management, and management of safety.

  Diagrams may be particularly useful; the name of the department or third party should be indicated.

- Delegated activities

  The national PSSF, where applicable, shall contain a description of the delegated activities and/or services relating to the fulfillment of pharmacovigilance obligations.

  Links with other organisations, such as co-marketing agreements and contracting of pharmacovigilance activities on the national level should be outlined. A description of the location and nature of contracts and agreements relating to the fulfilment of pharmacovigilance obligations should be provided. This may be in the form of a **list/table** to show the parties involved, the roles undertaken and the concerned product(s) and territories. The list should be organised according to; service providers (e.g. medical information, auditors, patient support programme providers, study data management etc.), commercial arrangements (distributors, licensing partners, co-marketing etc.) and other technical providers (hosting of computer systems etc.). Individual contractual agreements should be annexed with the national PSSF when the later is submitted. Individual contractual agreements shall be made available at the request of national medicines authorities at any time or during inspection and audit and the list provided in the Annexes (see II.C.3.2.8).

II.C.3.2.3. National PSSF section on the "sources of safety data"

Remember that the information provided in this section of the national PSSF shall focus on the national pharmacovigilance sub-system

Description supported by **Flow diagrams** shall be used to indicate the main stages of safety data collection for solicited and spontaneous case collection for products authorised in the Arab Country concerned, timeframes and parties involved. However represented, the description of the process for ICSRs from collection to reporting to national medicines authorities should indicate the departments and/or third parties involved.

For the purposes of inspection and audit of the pharmacovigilance system, safety data sources include data arising from study sources, including any studies, registries, surveillance or support programmes sponsored by the marketing authorisation holder through which ICSRs could be reported. MAHs should be able to produce and make available a list of such sources to support inspection, audit and headquarter QPPV and LSR oversights. It is recommended that the list should be comprehensive for products authorised in the Arab Country concerned (i.e. on the national level), irrespective of indication, product presentation or route of administration. The list should describe, **on the national basis**, the status of each study/programme, the product(s) and the main objective. It should distinguish between interventional and non-interventional studies and should be organised per active substance. The list should be comprehensive for all studies/programmes and should include ongoing studies/programmes as well as studies/programmes completed in the last two years and may be located in an Annex or provided separately.

II.C.3.2.4. National PSSF section on "computerised systems and databases"

Remember that the information provided in this section of the national PSSF shall focus on the national pharmacovigilance sub-system

It is understood that for multinational MAH this global safety database might be located outside the

Arab Country concerned (at the site where the main pharmacovigilance activities are performed globally e.g. Headquarter). However, LSR must have online access to national safety cases and all national pharmacovigilance data of the Arab Country concerned; otherwise at least backup database of this national data should always be kept in the local office.

The location, functionality and operational responsibility for computerised systems and databases used (on the national level) to receive, collate, record and report safety information and an assessment of their fitness for purpose shall be described in the national PSSF.

Where multiple computerised systems/databases are used on national level, the applicability of these to pharmacovigilance activities should be described in such a way that a clear overview of the extent of computerisation within the pharmacovigilance system can be understood. The validation status of key aspects of computer system functionality should also be described; the change control, nature of testing, back-up procedures and electronic data repositories vital to pharmacovigilance compliance should be included in summary, and the nature of the documentation available described. For non-electronic systems (where an electronic system may only be used for expedited submission of ICSRs), the management of the data, and mechanisms used to assure the integrity and accessibility of the safety data, and in particular the collation of information about adverse drug reactions, should be described.

II.C.3.2.5. National PSSF section on "pharmacovigilance processes"

Remember that the information provided in this section of the national PSSF shall focus on the national pharmacovigilance sub-system

An essential element of any pharmacovigilance system is that there are clear written procedures in place. Module I describes the required minimum set of written procedures for pharmacovigilance.

A description of the procedural documentation available on national level (standard operating procedures, manuals, etc.), the nature of the data held (e.g. the type of case data retained for ICSRs) and an indication of how records are held (e.g. safety database, paper file at site of receipt) should be provided in the national PSSF.

A **description** of the process, data handling and records for the performance of pharmacovigilance **(on the national level and as appropriate in integration with MAH's headquarter)**, covering the following aspects shall be included in the national PSSF:

- Continuous monitoring of product risk-benefit profile(s) applied and the result of evaluation and the decision making process for taking appropriate measures; this should include signal generation, detection and evaluation (in integration with the MAH's headquarter). This may also include several written procedures and instructions concerning safety database outputs, interactions with clinical departments etc;
- Risk management system(s) and monitoring of the outcome of risk minimisation measures; several departments may be involved in this area and interactions should be defined in written procedures or agreements. (in integration with the MAH's headquarter);
- ICSR collection, collation, follow-up, assessment and reporting; the procedures applied to this area should clarify what are local and what are global activities;
- PSUR scheduling, production and submission (see Module VII). (in integration with the MAH's

headquarter)

- Communication of safety concerns to consumers, healthcare professionals and the national medicines authorities;
- Implementation of safety variations to the summary of product characteristics (SmPC) and patient information leaflets; procedures should cover both internal (within the MAH) and external communications.

In each area, the marketing authorisation holder should be able to provide evidence of a sub-system that supports appropriate and timely decision making and action on the national level (taking into consideration liaising with the MAH's headquarter).

The description must be accompanied by the **list** of the following **processes for compliance management**, as well as interfaces with other functions **(on the national level and as appropriate in integration with MAH's headquarter)**:

1. the continuous monitoring of pharmacovigilance data, the examination of options for risk minimisation and prevention and appropriate measures are taken by the marketing authorisation holder;
2. the scientific evaluation by the marketing authorisation holder of all information on the risks of medicinal products;
3. the submission of accurate and verifiable data on serious and non-serious adverse reactions to the national medicines authorities within the time limits provided in the national regulations;
4. the quality, integrity and completeness of the information submitted on the risks of medicinal products, including processes to avoid duplicate submissions and to validate signals;
5. effective communication by the marketing authorisation holder with the national medicines authorities, including communication on new risks or changed risks, the pharmacovigilance system master file & national PSSF , risk management systems, risk minimisation measures, periodic safety update reports, corrective and preventive actions, and post-authorisation studies;
6. the update of product information by the marketing authorisation holder in the light of scientific knowledge, and on the basis of a continuous monitoring by the marketing authorisation holder of information released by the national medicines authorities;
7. appropriate communication by the marketing authorisation holder of relevant safety information to healthcare professionals and patients.

These interfaces with other functions include, but are not limited to, the roles and responsibilities of the LSR, responding to national medicines authority requests for information, literature searching, safety database change control, safety data exchange agreements, safety data archiving, pharmacovigilance auditing, quality control and training. The list, which may be located in the Annexes, should comprise **in cross matching** with each one of the topics highlighted above in this section, the topic name, the procedural document reference number, title, effective date and document type (for all standard operating procedures, work instructions, manuals etc.). Procedures belonging to service providers and other third parties should be clearly identified. In addition, any specific local (in the Arab Country concerned) procedures should be also indicated.

II.C.3.2.6. National PSSF section on "pharmacovigilance sub-system performance"

Remember that the information provided in this section of the national PSSF shall focus on the national pharmacovigilance sub-system

The national PSSF should contain evidence of the ongoing monitoring of performance of the national pharmacovigilance sub-system including compliance of the main outputs of pharmacovigilance. The national PSSF should include a description of the monitoring methods applied and contain as a minimum (the following should focus on performance on the national level):

- An explanation of how the correct reporting of domestic ICSRs is assessed. In the annex, figures/graphs should be provided to show the timeliness of 15-day and 90-day reporting (to national medicines authority) over the past year;
- A description of any metrics used to monitor the quality of submissions and performance of pharmacovigilance. This should include information provided by national medicines authorities regarding the quality of ICSR reporting, PSURs or other submissions;
- An overview of the timelines of PSUR reporting to national medicines authorities in the Arab Country concerned (the annex should reflect the latest figures used by the marketing authorisation holder to assess compliance on national level);
- An overview of the methods used to ensure timelines of safety variation submissions compared to internal and national medicines authority deadlines, including the tracking of required safety variations that have been identified but not yet been submitted;
- Where applicable, an overview of adherence to National Display of RMP commitments, or other obligations or conditions of marketing authorisation(s) relevant to pharmacovigilance.

Targets for the performance of the pharmacovigilance sub-system shall be described and explained. A list of performance indicators must be provided in the Annex to the national PSSF, alongside the results of (actual) performance measurements.

II.C.3.2.7. National PSSF section on "quality system"

Remember that the information provided in this section of the national PSSF shall focus on the national pharmacovigilance sub-system

A description of the quality management system should be provided, in terms of the structure of the organisation and the application of the quality to pharmacovigilance. This shall include:

Document and Record Control

Provide a description of the archiving arrangements (on national level) for electronic and/or hardcopy versions of the different types of records and documents for pharmacovigilance and quality system (see also Module I).

Procedural documents

- A general description of the types of documents used in pharmacovigilance (standards, operating procedures, work instructions etc), the applicability of the various documents at local level within the organisation, and the controls that are applied to their accessibility, implementation and maintenance.
- Information about the documentation systems applied to relevant procedural documents under the control of third parties.

A list of specific procedures and processes related to the pharmacovigilance activities (on the national level) and interfaces with other functions, with details of how the procedures can be accessed must be provided, and the detailed guidance for the inclusion of these is in section II.C.3.2.5.

Training

Staff should be appropriately trained for performing pharmacovigilance related activities and this includes not only staff within pharmacovigilance departments but also any individual that may receive safety reports such as sales personnel or clinical research staff.

- A description of the resource management for the performance of pharmacovigilance activities **on the national level**:
  - the organisational chart giving the number of people (full time equivalents) involved in pharmacovigilance activities, which may be provided in the section describing the organisational structure (see II.C.3.2.3.)
- Information about sites where the personnel are located (this is described under sections II.C.3.2.2.) whereby the sites are provided in the national PSSF in relation to the organisation of specific pharmacovigilance activities. However, a description should be provided in order to explain the training organisation in relation to the personnel and site information;
- A summary description of the training concept, including a reference to the location training files, record as well as the trainings materials.

Auditing

Information about quality assurance auditing of the national pharmacovigilance sub-system should be included in the national PSSF. A description of the approach used to plan audits of the national pharmacovigilance sub-system and the reporting mechanism and timelines should be provided, with a current list of the scheduled and completed audits concerning the national pharmacovigilance sub-system maintained in the annex referred to II.C.3.2.8. This list should describe the date(s) (of conduct and of report), scope and completion status of audits of service providers, specific pharmacovigilance activities or sites undertaking pharmacovigilance and their operational interfaces relevant to the fulfilment of the pharmacovigilance obligations, and cover a rolling 5 year period.

The national PSSF shall also contain a note associated with any audit where significant findings are raised. This means that the presence of findings that fulfil the national criteria for major or critical findings must be indicated (see Module IV). The audit report must be documented within the

quality system; in the national PSSF it is sufficient to provide a brief description of the corrective and/or preventative action(s) associated with the significant finding, the date it was identified and the anticipated resolution date(s), with cross reference to the audit report and the documented corrective and preventative action plan(s). In the annex, in the list of audits conducted to the national pharmacovigilance sub-system, those associated with unresolved notes in national PSSF, should be identified. The note and associated corrective and preventative action(s), shall be documented in the national PSSF until the corrective and/or preventative action(s) have been fully implemented, that is, the note is only removed once corrective action and/or sufficient improvement can be demonstrated or has been independently verified. The addition, amendment or removal of the notes must therefore be recorded in the logbook.

As a means of managing the national pharmacovigilance sub-system, and providing a basis for audit or inspection, the national PSSF should also describe the process for recording, managing and resolving deviations from the quality system. The national PSSF shall also document deviations from pharmacovigilance procedures on the national level, their impact and management until resolved. This may be documented in the form of a list referencing a deviation report, and its date and procedure concerned.

II.C.3.2.8. Annex to the national PSSF

Remember that the information/ documents provided in this annex of the national PSSF shall focus on the national pharmacovigilance sub-system

An annex to the national PSSF shall contain the following documents:

- A list of medicinal products covered by this national PSSF in the Arab Country concerned, the following should be provided for each medicinal product in the list:
  - the name of the medicinal product,
  - the name of the active substance(s),
  - the authorization number in the Arab Country concerned,
  - the presence on the market in the Arab Country concerned (i.e. marketing status),
  - other country (ies) in which this product is authorized,
  - the presence on the market in these other country(ies) stated in the list (i.e. marketing status),

  The list should be organised per active substance and, where applicable, should indicate what type of product specific safety monitoring requirements exist (for example risk minimisation measures contained in the National Display of RMP or laid down as conditions of the marketing authorisation, non-standard PSUR periodicity. The monitoring information may be provided as a secondary list.

  For marketing authorisations that are included in a different pharmacovigilance system, for example, because the MAH has more than one pharmacovigilance system **on the national level** or third party agreements exist to delegate the system, reference to the additional national PSSF(s) should also be provided as a separate list in the Annexes, such that, for a MAH, the entire product portfolio can be related to the set of national PSSF.

Where national pharmacovigilance sub-systems are shared, all products that utilise the national pharmacovigilance sub-system should be included, so that the entire list of products covered by the file is available. The products lists may be presented separately, organised per MAH. Alternatively, a single list may be used, which is supplemented with the name of the MAH(s) for each product, or a separate note can be included to describe the product(s) and the MAH(s) covered;

- A list of written policies and procedures for the compliance management (see II.C.3.2.5.);
- A list of contractual agreements covering delegated activities in the Arab Country concerned including the medicinal products. In addition, a copy of the individual contractual agreements shall also be included in this annex when the PSMF is submitted to the national medicines authorities;
- A list of tasks that have been delegated by the LSR (if any);
- A list of all completed audits on the national level, for a period of five years, and a list of audit schedules on the national level;
- Where applicable, a list of performance indicators (see II.C.3.3.6.);
- Where applicable, a list of other national PSSF(s) held by the same marketing authorisation holder;

  This list should include the national PSSF number(s), the name of MAH, the name of the LSR responsible for the pharmacovigilance sub-system used. If the pharmacovigilance system is managed by another party that is not a marketing authorisation holder, the name of the service provider should also be included.
- A logbook of any change of the content of the national PSSF made within the last five years except the changes in annexes and the following LSR information: CV, contact details, back-up arrangements and contact person for pharmacovigilance on the national level. .In addition, other change control documentation should be included as appropriate. Documented changes shall include at least the date, person responsible for the change and the nature of the change.

II.C.3.3. National PSSF presentation

The National PSSF shall be continuously accessible to the LSR and to the national medicines authorities any time on request. The information shall be succinct, accurate and reflect the current system in place, which means that whatever format is used, it must be possible to keep the information up to date and, when necessary, to revise to take account of experience gained, technical and scientific progress and amendments to the legislative requirements. Although provision of the document within 14 days of request by a national medicines authority is required, marketing authorisation holders should be aware that immediate access to the National PSSF may also be required by the national medicines authorities.

II.C.3.3.1. Format and layout

The National PSSF may be in electronic form on condition that a clearly arranged printed copy can be made available to national medicines authorities if requested. In any format, the national PSSF

should be legible, complete, provided in a manner that ensures all documentation is accessible and allow full traceability of changes. Therefore, it may be appropriate to restrict access to it in order to ensure appropriate control over the content and to assign specific responsibilities for the national PSSF in terms of change control and archiving.

The national PSSF should be written in English (unless otherwise is requested by the national medicines authority in the Arab Country concerned), indexed in a manner consistent with the headings described in this Module, and allow easy navigation to the contents with. In general, embedded documents are discouraged. The use of electronic book-marking and searchable text is recommended. Documents such as copies of signed statements or agreements should be included as appendices and described in the index.

The documents and particulars of the national PSSF shall be presented with the following headings and, if hardcopy, in the order outlined:

Cover Page to include:

- The unique number assigned by the national medicines authority to national PSSF (if applicable).
- The name of the MAH, the MAH of the LSR responsible for the national pharmacovigilance sub-system described (if different), as well as the relevant QPPV third party company name (if applicable).
- The name of other concerned MAH(s) (sharing the national pharmacovigilance sub-system) (if applicable)
- The list of national PSSF(s) for the MAH (concerning products with a different pharmacovigilance sub-system) (if applicable)
- The date of preparation / last update

The headings used in II.C.3.2. should be used for the main content of the national PSSF. The minimum required content of the Annexes is outlined in II.C.3.2.8., and additional information may be included in the Annexes, provided that the requirements for the content of the main sections (II.C.3.2.1-7) are also met. The positioning of content in the Annexes is further outlined; the bulleted points are descriptions of possible content (and not required headings):

<u>The LSR for national pharmacovigilance sub-system, Annex A</u>

- The list of tasks that have been delegated by the LSR (if any), or the applicable procedural document
- The curriculum vitae of the LSR and associated documents
- Contact details

<u>The Organisational Structure of the MAH, Annex B</u>

- The lists of contracts and agreements
- a copy of the individual contractual agreements relevant to the Arab Country concerned

<u>Sources of safety data, Annex C</u>

Computerised systems and Databases, Annex D

Pharmacovigilance Process, and written procedures, Annex E

- Lists of procedural documents

Pharmacovigilance Sub-System Performance, Annex F

- Lists of performance indicators
- Current results of performance assessment in relation to the indicators

Quality System, Annex G

- Audit schedules (for national pharmacovigilance sub-system)
- List of audits conducted and completed (for national pharmacovigilance sub-system)

Products, Annex H

- List(s) of products covered by the national pharmacovigilance sub-system described in this national PSSF
- Any notes concerning the MAH per product

Document and Record Control, Annex I

- Logbook
- Documentation of history of changes for Annex contents, indexed according to the Annexes A-H and their content if not provided within the relevant annex itself
- Documentation to support notifications and signatures concerning the national PSSF, as required. Where there is no content for an Annex, there is no need to provide blank content pages with headings, however, the Annexes that are provided should still be named according to the format described. For example, Annex E should **NOT** be renamed to Annex D in circumstances where no Annex concerning computerised systems and databases is used, Annex D should simply be described as 'unused' in the indexing, in order that recipients of the pharmacovigilance system master file are assured that missing content is intended.

II.C.3.4. Summary of the applicant's national pharmacovigilance sub-system

Except in the situations described in see II.C.3.5.1. where the full PSSF (along together with its summary) is requested to be submitted in the marketing authorisation application; only a summary of the applicant's national pharmacovigilance sub-system is required to be included in the marketing authorisation application, which shall include the following elements in module 1.8. of the dossier:

- proof that the applicant has at his disposal a LSR and that he resides in the Arab Country concerned;
- the contact details of the LSR;
- a statement signed by the applicant to the effect that the applicant has the necessary means to

fulfil on the national level the pharmacovigilance tasks and responsibilities listed in this GVP modules;

- a reference to the location where the national PSSF for the medicinal product is kept.

The national PPSF should not routinely be submitted during the assessment of new marketing authorisation applications (i.e. pre-authorisation), but may be requested on an **ad hoc basis**, (see II.C.3.5. for submission requirement).

II.C.3.5. Submission of multinational MAH's PSMF and national PSSF

The PSMF and the national PSSF shall be maintained in a current state and be permanently available to be submitted.

II.C.3.5.1. In the marketing authorization application:

The full PSMF (along together with its summary) and the national PSSF (along together with its summary) are requested to be submitted in the marketing authorisation applications (i.e. pre-authorisation) in the following situations:

- the applicant has not previously held a marketing authorisation in the Arab Country concerned, full PSMF and the national PSSF are appropriate to review the description of a pharmacovigilance system;
- the applicant has not previously submit the PSMF and the national PSSF in the Arab Country concerned or is in the process of establishing a new pharmacovigilance system;
- the applicant had major changes in its organisation, such as mergers and acquisitions or in its pharmacovigilance system
- the applicant has major or critical findings in the previous assessment of the pharmacovigilance system (global &/or local) by the national medicines authority;
- the applicant has a history or culture of pharmacovigilance non-compliance; previous information (e.g. inspection history and non-compliance notifications or information from other authorities). In addition to the submission of the full PSMF and national PSSF, if the marketing authorisation holder has a history of serious and/or persistent pharmacovigilance non-compliance, a pre-authorisation pharmacovigilance inspection may be one mechanism to confirm that improvements have been made to the system before a new authorisation is granted (see module III);
- where specific concerns about the pharmacovigilance system(global &/or local) and/or the product safety profile exist;
- any other situation as seen appropriate by the national medicines authority;

In case that these situations apply to the national PSSF but not the PSMF; then the multinational MAH can submit the "summary of PSMF" & the "national PSSF", and vice versa.

Except in the above situations, the PSMF and/or the national PSSF (as appropriate) should not

routinely be requested during the assessment of new marketing authorisation applications (i.e. pre-authorisation), instead the "summary of PSMF" and "summary of national PSSF" should be submitted. The following table summarises the different scenarios.

Table II.1 Conditions to submit the PSMF and the national PSSF

Conditions	Document submitted
Situations in II.C.3.5.1 apply to both PSMF and the national PSSF	PSMF & summary PSMF National PSSF & summary of national PSSF
Situations in II.C.3.5.1 apply to only national PSSF	Summary PSMF & National PSSF & summary of national PSSF
Situations in II.C.3.5.1 apply to only PSMF	PSMF & summary PSMF summary of national PSSF
Situations in II.C.3.5.1 do NOT apply to both PSMF and the national PSSF	Summary PSMF & summary National PSSF

II.C.3.5.2. Post -authorisation:

The full PSMF and the national PSSF may be requested on an **ad hoc basis** by the national medicines authority in the following situations

- particularly if a new pharmacovigilance system is being implemented or the MAH has not previously submit the PSMF and the national PSSF in the Arab Country concerned; or
- if product specific safety concerns or issues with compliance with pharmacovigilance requirements have been identified; or
- in preparation for an pharmacovigilance inspection
- any time upon request of the national medicines authority

The marketing authorisation holder shall maintain and make available on request a copy of the PSMF and national PSSF. The marketing authorisation holder must submit the copy within 14 days after receipt of the request from the national medicines authority in the Arab Countries concerned (unless otherwise stated in the request). The PSMF and national PSSF should be submitted in a clearly arranged readable electronic format or clearly arranged printed copy (consult with the national medicines authority for required format).

Guideline on good pharmacovigilance practices (GVP)
For Arab Countries

GVP: Modules

Module III – Pharmacovigilance inspections

III.A. Introduction

This Module contains guidance on the planning, conduct, reporting and follow-up of pharmacovigilance inspections in the Arab Countries and outlines the role of the different parties involved. General guidance is provided under III.B., while III.C. covers the overall operation of pharmacovigilance inspections in the Arab Countries.

In order to determine that marketing authorisation holders comply with pharmacovigilance obligations established within an Arab Country, and to facilitate compliance, the national medicines authorities concerned shall conduct, pharmacovigilance inspections of marketing authorisation holders or any firms employed to fulfil marketing authorisation holder's pharmacovigilance obligations. Such inspections shall be carried out by inspectors appointed by the national medicines authority and empowered to inspect the premises, records, documents and pharmacovigilance system master file (PSMF) of the marketing authorisation holder or any firms employed by the marketing authorisation holder to perform the pharmacovigilance activities. In particular, marketing authorisation holders are required to provide, on request, the pharmacovigilance system master file, which will be used to inform inspection conduct (see Module II).

The objectives of pharmacovigilance inspections are:

- to determine that the marketing authorisation holder has personnel, systems and facilities in place to meet their pharmacovigilance obligations;
- to identify, record and address non-compliance which may pose a risk to public health;
- to use the inspection results as a basis for enforcement action, where considered necessary.

For marketing authorisation holders of products in an Arab Country, it is the responsibility of the national medicines authority of this country to verify, that the marketing authorisation holder for the medicinal product satisfies the national pharmacovigilance requirements. The pharmacovigilance system master file shall be located either where the main pharmacovigilance activities of the marketing authorisation holder are performed or where the qualified person responsible for pharmacovigilance operates. The national medicines authority may conduct pre-authorisation inspections to verify the accuracy and successful implementation of the existing or proposed pharmacovigilance system.

Pharmacovigilance inspection programmes will be implemented, which will include routine inspections scheduled according to a risk-based approach and will also incorporate "for cause" inspections, which have been triggered to examine suspected non-compliance or potential risks, usually with impact on a specific product(s).

The results of an inspection will be provided to the inspected entity, who will be given the opportunity to comment on any non-compliance identified. Any non-compliance should also be rectified by the marketing authorisation holder in a timely manner through the implementation of a corrective and preventive action plan.

If the outcome of the inspection is that the marketing authorisation holder does not comply with the pharmacovigilance obligations, the national medicines authority concerned shall take the necessary measures to ensure that a marketing authorisation holder is subject to effective, proportionate and

dissuasive penalties.

Sharing of information and communication between pharmacovigilance inspectors and assessors, is very important to ensure successful prioritisation and targeting of these inspections and for the proper follow-up of inspections and the provision of recommendations on actions to be taken.

III.B. Structures and processes

III.B.1. Inspection types

III.B.1.1. System and product-related inspections

Pharmacovigilance system inspections are designed to review the procedures, systems, personnel, and facilities in place and determine their compliance with regulatory pharmacovigilance obligations. As part of this review, product specific examples may be used to demonstrate the operation of the pharmacovigilance system.

Product-related pharmacovigilance inspections are primarily focused on product-related pharmacovigilance issues, including product-specific activities and documentation, rather than a general system review. Some aspects of the general system may still be examined as part of a product-related inspection (e.g. the system used for that product).

III.B.1.2. Routine and "for cause" pharmacovigilance inspections

Routine pharmacovigilance inspections are inspections scheduled in advance as part of inspection programmes. There is no specific trigger to initiate these inspections, although a risk-based approach to optimize supervisory activities should be implemented. These inspections are usually system inspections but one or more specific products may be selected as examples to verify the implementation of the system and to provide practical evidence of its functioning and compliance. Particular concerns, e.g. raised by assessors, may also be included in the scope of a routine inspection, in order to investigate the specific issues.

For cause pharmacovigilance inspections are undertaken when a trigger is recognised, and an inspection is considered an appropriate way to examine the issues. For cause inspections are more likely to focus on specific pharmacovigilance processes or to include an examination of identified compliance issues and their impact for a specific product. However, full system inspections may also be performed resulting from a trigger. For cause inspections may arise when, for example, one or more of the triggers listed below are identified (but not limited to):

- risk-benefit balance of the product:
  - change in the risk-benefit balance where further examination through an inspection is considered appropriate;
  - delays or failure to identify or communicate a risk or a change in the risk-benefit balance;
  - communication of information on pharmacovigilance concerns to the general public without giving prior or simultaneous notification to the national medicines authorities, as applicable;

  - non-compliance or product safety issues identified during the monitoring of pharmacovigilance activities by the national medicines authorities;
  - suspension or product withdrawal with no advance notice to the national medicines authorities;
- reporting obligations (expedited and periodic):
  - delays or omissions in reporting;
  - poor quality or incomplete reports;
  - inconsistencies between reports and other information sources;
- requests from the national medicines authorities:
  - failure to provide the requested information or data within the deadline specified by the national medicines authorities;
  - poor quality or inadequate provision of data to fulfil requests for information from the national medicines authorities;
- fulfilment of commitments:
  - concerns about the status or fulfilment of risk management plan (RMP) commitments;
  - delays or failure to carry out specific obligations relating to the monitoring of product safety, identified at the time of the marketing authorisation;
  - poor quality of reports requested as specific obligations;
- Inspections
  - delays in the implementation or inappropriate implementation of corrective and preventive actions;
  - information such as non-compliance or product safety issues from other types of inspections (GCP, GMP, GLP and GDP) ;
  - inspection information received from other international authorities, which may highlight issues of non-compliance;
- others:
  - concerns following review of the pharmacovigilance system master file;
  - non-inspection related information received from other authorities, which may highlight issues of non-compliance;
  - other sources of information or complaints.

III.B.1.3. Pre-authorisation inspections

Pre-authorisation pharmacovigilance inspections are inspections performed before a marketing authorisation is granted. These inspections are conducted with the intent of examining the existing or proposed pharmacovigilance system as it has been described by the applicant in support of the marketing authorisation application. Pre-authorisation inspections are not mandatory, but may be

requested in specific circumstances. Principles and procedures for requesting pre-authorisation inspections should be developed to avoid performing unnecessary inspections which may delay the granting of a marketing authorisation. The following aspects shall be considered during the validation phase and/or early during the assessment phase:

- the applicant has not previously operated a pharmacovigilance system in the Arab Country concerned or is in the process of establishing a new pharmacovigilance system;
- previous information (e.g. inspection history and non-compliance notifications or information from other authorities) indicates that the applicant has a poor history or culture of compliance. If the marketing authorisation holder has a history of serious and/or persistent pharmacovigilance non-compliance, a pre-authorisation pharmacovigilance inspection may be one mechanism to confirm that improvements have been made to the system before a new authorisation is granted;
- due to product-specific safety concerns, it may be considered appropriate to examine the applicant's ability:
  - to implement product specific risk-minimisation activities; or
  - to meet specific safety conditions which may be imposed; or
  - to manage routine pharmacovigilance for the product of concern (e.g. anticipated significant increase in adverse reaction reports when compared to previous products).

In most cases, a risk assessment based on a combination of product-specific and system-related issues should be performed before a pre-authorisation pharmacovigilance inspection is requested.

If the outcome of the pre-authorisation inspection raises concerns about the applicant's ability to comply with the national pharmacovigilance requirements, the following recommendations may be considered:

- non approval of the marketing authorisation;
- a re-inspection prior to approval of the marketing authorisation to confirm that critical findings and recommendations have been addressed;
- granting of the marketing authorisation with the recommendation to perform an early post-authorisation pharmacovigilance inspection. In this case, the findings would influence the timing of an inspection conducted as part of the national routine programme of pharmacovigilance inspections in the Arab Country concerned (see III.B.2.);
- imposition of safety conditions to the marketing authorization.

III.B.1.4. Post-authorisation inspections

Post-authorisation pharmacovigilance inspections are inspections performed after a marketing authorisation is granted and are intended to examine whether the marketing authorisation holder complies with its pharmacovigilance obligations. They can be any of the types mentioned under III.B.1.1 and IIIB.1.2.

III.B.1.5. Announced and unannounced inspections

It is anticipated that the majority of inspections will be announced i.e. notified in advance to the

inspected party, to ensure the availability of relevant individuals for the inspection. However, on occasion, it may be appropriate to conduct unannounced inspections or to announce an inspection at short notice (e.g. when the announcement could compromise the objectives of the inspection or when the inspection is conducted in a short timeframe due to urgent safety reasons).

III.B.1.6. Re-inspections

A re-inspection may be conducted on a routine basis as part of a routine inspection programme. Risk factors will be assessed in order to prioritise re-inspections. Early re-inspection may take place where significant non-compliance has been identified and where it is necessary to verify actions taken to address findings and to evaluate ongoing compliance with the obligations, including evaluation of changes in the pharmacovigilance system. Early re-inspection may also be appropriate when it is known from a previous inspection that the inspected party had failed to implement appropriately corrective and preventive actions in response to an earlier inspection.

III.B.1.7. Remote inspections

These are pharmacovigilance inspections performed by inspectors remote from the premises of the marketing authorisation holder or firms employed by the marketing authorisation holder. Communication mechanisms such as the internet or telephone may be used in the conduct of the inspection. For example, in cases where key sites for pharmacovigilance activities are located outside the Arab Country concerned or a third party service provider is not available at the actual inspection site, but it is feasible to arrange interviews of relevant staff and review of documentation, including the safety database, source documents and pharmacovigilance system master file, via remote access. This approach may also be taken where there are logistical challenges to an on-site inspection during exceptional circumstances (e.g. a pandemic outbreak or travel restrictions). Such approaches are taken at the discretion of the inspectors and in agreement with the body commissioning the inspection. The logistical aspects of the remote inspection should be considered following liaison with the marketing authorisation holder.

Where feasible, a remote inspection may lead to a visit to the inspection site if it is considered that the remote inspection has revealed issues which require on-site inspection or if the objectives of the inspection could not be met by remote inspection.

III.B.2. Inspection planning

Pharmacovigilance inspection planning should be based on a systematic and risk-based approach to make the best use of surveillance and enforcement resources whilst maintaining a high level of public health protection. A risk-based approach to inspection planning will enable the frequency, scope and breadth of inspections to be determined accordingly.

In order to ensure that inspection resources are used in an efficient way, the scheduling and conduct of inspections will be driven by the preparation of inspection programmes. Sharing of information and communication between pharmacovigilance inspectors and assessors is important to ensure successful prioritisation and targeting of these inspections.

Factors which may be taken into consideration, as appropriate, by the national medicines authorities

when establishing pharmacovigilance inspection programmes include, but are not limited to:

- inspection related:
  - compliance history identified during previous pharmacovigilance inspections or other types of inspections (GCP, GMP, GLP and GDP);
  - re-inspection date recommended by the inspectors or assessors as a result of a previous inspection;
- product related:
  - product with additional pharmacovigilance activities or risk-minimisation activities;
  - authorisation with conditions associated with safety, e.g. requirement for post-authorisation safety studies (PASS) or designation for additional monitoring;
  - product(s) with large sales volume, i.e. products associated with large patient exposure in the Arab Country concerned;
  - product(s) with limited alternative in the market place;
- Marketing authorisation holder related:
  - marketing authorisation holder that has never been subject to a pharmacovigilance inspection;
  - marketing authorisation holder with many products on the market in the Arab Country concerned;
  - resources available to the marketing authorisation holder for the pharmacovigilance activities they undertake;
  - marketing authorisation holder with no previous marketing authorisations in the Arab Country concerned;
  - negative information and/or safety concerns raised by the national medicines authority, other bodies/medicines authorities outside the Arab Country concerned or other areas (i.e. GCP, GMP, GLP and GDP);
  - changes in the marketing authorisation holder organisation, such as mergers and acquisitions;
- pharmacovigilance system related:
  - marketing authorisation holder with sub-contracted pharmacovigilance activities (function of the qualified person responsible for pharmacovigilance (QPPV) in the Arab Country concerned, reporting of safety data etc.) and/or multiple firms employed to perform pharmacovigilance activities;
  - change of QPPV/local safety responsible (LSR) since the last inspection;
  - changes to the pharmacovigilance safety database(s), which could include a change in the database itself or associated databases, the validation status of the database as well as information about transferred or migrated data;
  - changes in contractual arrangements with pharmacovigilance service providers or the sites

at which pharmacovigilance is conducted;

- delegation or transfer of pharmacovigilance system master file management.

The national medicines authorities may solicit information from marketing authorisation holders for risk-based inspection planning purposes if it is not readily available elsewhere.

III.B.3. Sites to be inspected

Any party carrying out pharmacovigilance activities in whole or in part, on behalf of, or in conjunction with the marketing authorisation holder may be inspected, in order to confirm their capability to support the marketing authorisation holder's compliance with pharmacovigilance obligations.

The sites to be inspected may be located in or outside the Arab Country concerned. Inspections of sites outside the Arab Country concerned might be appropriate where the main pharmacovigilance centre, databases and/or activities are located outside this concerned Country and it would be otherwise inefficient or impossible to confirm compliance from a site within the Arab Country concerned. The national medicines authorities may cooperate in the coordination of inspections in third countries.

The type and number of sites to be inspected should be selected appropriately to ensure that the key objectives within the scope of the inspection are met.

III.B.4. Inspection scope

The inspection scope will depend on the objectives of the inspection as well as the coverage of any previous inspections by the national medicines authority and whether it is a system or product-related inspection (a description of the types of inspection, inspection triggers and points to consider for the different types of inspection is provided in III.B.1.).

The following elements should be considered when preparing the scope of the inspection, as applicable:

- information supplied in the pharmacovigilance system master file;
- information concerning the functioning of the pharmacovigilance system, e.g. compliance data available from the national medicines authority such as the "National Pharmacovigilance and Safety reports database" reporting and data quality audits;
- specific triggers (see III.B.1.2. for examples of triggers);

It may be appropriate for additional data to be requested in advance of an inspection in order to select appropriate sites or clarify aspects of the pharmacovigilance system.

III.B.4.1. Routine pharmacovigilance inspections

Routine pharmacovigilance inspections should examine compliance with national medicines authority legislation and guidance, and the scope of such inspections should include the following elements, as appropriate:

- individual case safety reports (ICSRs):
  - collecting, receiving and exchanging reports - from all types of sources, sites and departments within the pharmacovigilance system, including from those firms employed to fulfil marketing authorisation holder's pharmacovigilance obligations and departments other than drug safety;
  - assessment, including mechanisms for obtaining and recording reporter assessments, company application of event terms, seriousness, expectedness and causality. In addition to examples of domestic ICSRs (from within the Arab Country concerned), examples of ICSRs reported from outside the Arab Country concerned should be examined as part of this review (if applicable);
  - follow-up and outcome recording, for example final outcome of cases of exposure in pregnancy and medical confirmation of consumer reported events;
  - reporting according to the requirements for various types of reported ICSRs, including onward reporting to the relevant bodies and timeliness of such reporting;
  - record keeping and archiving for ICSRs;
- periodic safety update reports (PSURs);
  - completeness and accuracy of the data included, appropriateness of decisions concerning data that are not included;
  - addressing safety topics, providing relevant analyses and actions;
  - formatting according to requirements;
  - timelines of submissions;
- ongoing safety evaluation;
  - use of all relevant sources of information for signal detection;
  - appropriately applied methodology concerning analysis;
  - appropriateness of investigations and follow-up actions, e.g. the implementation of recommendations following data review;
  - implementation of the RMP, or other commitments, e.g. conditions of marketing authorisation;
  - timely identification and provision of complete and accurate data to the medicines authority of the Arab Country concerned, in particular in response to specific requests for data;
  - implementation of approved changes to safety communications and product information, including internal distribution and external publication;
- interventional (where appropriate) and non-interventional clinical trials:
  - reporting suspected unexpected serious adverse reactions (SUSARs) and non-interventional study cases according to the national regulations;
  - receiving, recording and assessing cases from interventional and non-interventional trials

(see ICSRs);

- submission of study results and relevant safety information (e.g. development safety update reports (DSURs) and information included in PSURs), where applicable, PASS or post-authorisation efficacy studies (PAES) submissions, particularly when associated with specific obligations or RMP commitments;
- appropriate selection of reference safety information, maintenance of investigator brochures and patient information with respect to safety;
- the inclusion of study data in ongoing safety evaluation;

- pharmacovigilance system:
  - QPPV/LSR roles and responsibilities, e.g. access to the quality system, the pharmacovigilance system master file, performance metrics, audit and inspection reports, and their ability to take action to improve compliance;
  - the roles and responsibilities of the marketing authorisation holder in relation to the pharmacovigilance system;
  - accuracy, completeness and maintenance of the pharmacovigilance system master file;
  - quality and adequacy of training, qualifications and experience of staff;
  - coverage and adherence to the quality system in relation to pharmacovigilance, including quality control and quality assurance processes;
  - fitness for purpose of computerised systems;
  - contracts and agreements with all relevant parties appropriately reflect responsibilities and activities in the fulfilment of pharmacovigilance, and are adhered to.
  - As a general approach, a marketing authorisation holder should be inspected on the basis of risk-based considerations, but it is recommended to routinely inspect MAH at least once every 4 years.

The inspection may include the system for the fulfilment of conditions of a marketing authorisation and the implementation of risk–minimisation activities, as they relate to any of the above safety topics.

III.B.4.2. For cause inspections

The scope of the inspection will depend on the specific trigger(s). Some, but not all of the elements listed in III.B.4.1 and below, may be relevant:

- QPPV/LSR involvement and awareness of product-specific issues;
- in-depth examination of processes, decision-making, communications and actions relating to a specific trigger and/or product.

III.B.4.3. Re-inspections

For the scope of a re-inspection, the following aspects should be considered:

- review of the status of the system and/or corrective and preventive action plan(s) resulting from previous pharmacovigilance inspection(s);
- review of significant changes that have been made to the pharmacovigilance system since the last pharmacovigilance inspection (e.g. change in the pharmacovigilance database, company mergers or acquisitions, significant changes in contracted activities, change in QPPV/LSR as appropriate);
- review of process and/or product-specific issues identified from the assessment of information provided by the marketing authorisation holder, or not covered in a prior inspection.

The scope of re-inspection will depend on inspection history. It may be appropriate to conduct a complete system review, for example if a long time has elapsed since the previous inspection, in which case the elements listed in III.B.4.1. may be considered for the inspection scope, as appropriate.

III.B.5. Inspection process

Pharmacovigilance inspections should be planned, coordinated, conducted, reported on, followed-up and documented in accordance with national inspection procedures.

The pharmacovigilance inspections procedure will cover, at least, the following processes:

- sharing of information;
- inspection planning;
- pre-authorisation inspections;
- coordination of pharmacovigilance inspections in the Arab Countries concerned (if applicable);
- coordination of third country inspections (including inspections of contractors in third countries);
- preparation of pharmacovigilance inspections;
- conduct of pharmacovigilance inspections;
- reporting of pharmacovigilance inspections and inspection follow-up;
- communication and prioritisation of pharmacovigilance inspections and findings;
- interaction with national pharmacovigilance committee (if applicable) in relation to inspections and their follow-up;
- record-keeping and archiving of documents obtained or resulting from pharmacovigilance inspections;
- unannounced inspections;
- sanctions and enforcement in case of serious non-compliance;
- recommendations on the training and experience of inspectors performing pharmacovigilance inspections.

These procedures will be revised and updated as deemed necessary. New procedures may also be developed when the need is identified in relation to the inspection process.

III.B.6. Inspection follow-up

When non-compliance with pharmacovigilance obligations is identified during an inspection, follow-up will be required until a corrective and preventive action plan is completed. The following follow-up actions should be considered, as appropriate:

- review of the marketing authorisation holder's corrective and preventive action plan;
- review of the periodic progress reports, when deemed necessary;
- re-inspection to assess appropriate implementation of the corrective and preventive action plan;
- requests for submission of previously un-submitted data; submission of variations, e.g. to amend product information; submission of impact analyses, e.g. following review of data that were not previously considered during routine signal detection activities;
- requests for issuing safety communications, including amendments of marketing and/or advertising information;
- requests for a meeting with the marketing authorisation holder to discuss the deficiencies, the impact of the deficiencies and action plans;
- communication of the inspection findings to regulatory authorities in other countries (Arab and non- Arab countries);
- other product-related actions depending on the impact of the deficiencies and the outcome of follow-up actions (this may include recalls or actions relating to the marketing authorisations or clinical trial authorisations).

Sharing information and communication between pharmacovigilance inspectors and assessors is important for the proper follow-up of inspections and the provision of recommendations on actions to be taken.

III.B.7. Regulatory actions and sanctions

According to the national legislations and regulations, in order to protect public health, the national medicines authorities are obliged to ensure compliance with pharmacovigilance obligations. When non-compliance with pharmacovigilance obligations is detected, the necessary action will be judged on a case-by-case basis. What action is taken will depend on the potential negative public health impact of the non-compliance(s), but any instance of non-compliance may be considered for enforcement action. The medicines authority of the Arab Country concerned shall take the necessary measures to ensure that a marketing authorisation holder is subject to effective, proportionate and dissuasive penalties. Moreover, financial penalties may be imposed on the holders of marketing authorisations to ensure the enforcement of certain obligations connected with marketing authorisations for medicinal products.In the event of non-compliance, possible regulatory options include the following, in accordance with guidance and, as applicable, rules set in legislation:

- education and facilitation: the national medicines authority may communicate with marketing authorisation holder representatives (e.g. in a meeting) to summarise the identified

non-compliances, to clarify the legal requirements and the expectations of the regulator, and to review the marketing authorisation holder's proposals for corrective and preventive actions;

- provision of information to other medicines authorities (in Arab and non- Arab countries) under the framework of confidentiality arrangements;
- inspection: non-compliant marketing authorisation holders may be inspected to determine the extent of non-compliance and then re-inspected to ensure compliance is achieved;
- warning letter, non-compliance statement or infringement notice; these are instruments which national medicines authorities may issue stating the legislation and guideline that has been breached, reminding marketing authorisation holders of their pharmacovigilance obligations or specifying the steps that the marketing authorisation holder must take and in what timeframe in order to rectify the non-compliance and in order to prevent a further case of non-compliance;
- the national medicines authority may consider making public a list of marketing authorisation holders found to be seriously or persistently non-compliant;
- actions against a marketing authorisation(s) or authorisation application(s) e.g.
  - Urgent Safety Restriction;
  - variation of the marketing authorisation;
  - suspension or revocation of the marketing authorisation;
  - delays in approvals of new marketing authorisation applications until corrective and preventive actions have been implemented or the addition of safety conditions to new authorisations;
  - requests for pre-authorisation inspections;
- product recalls e.g. where important safety warnings have been omitted from product information;
- action relating to marketing or advertising information;
- amendments or suspension of clinical trials due to product-specific safety issues;
- administrative penalties, usually fixed fines or based on company profits or levied on a daily basis;
- referral for criminal prosecution with the possibility of imprisonment (in accordance with national legislation).

III.B.8. Record management and archiving

The principles and requirements to be followed will be described in the procedure on Record Keeping and Archiving of Documents Obtained or Resulting from the Pharmacovigilance Inspections referred to in III.B.5.

III.B.9. Qualification and training of inspectors

Inspectors who are involved in the conduct of pharmacovigilance inspections requested by the

national medicines authority should be officials of, or appointed by, the national medicines authority in accordance with national regulation and follow the provisions of the national medicines authority.

It is recommended that inspectors are appointed based upon their experience (especially in pharmacovigilance) and the minimum requirements defined by the national medicines authority. In addition, consideration should be given to the recommendations for training and experience described in the pharmacovigilance inspections procedures.

The inspectors should undergo training to the extent necessary to ensure their competence in the skills required for preparing, conducting and reporting inspections. They should also be trained in pharmacovigilance processes and requirements in such way that they are able, if not acquired by their experience, to comprehend the different aspects of a pharmacovigilance system.

Documented processes should be in place in order to ensure that inspection competencies are maintained. In particular, inspectors should be kept updated with the current status of pharmacovigilance legislation and guidance.

Training and experience should be documented individually and evaluated according to the requirements of the applicable quality system of the concerned medicines authority.

III.B.10. Quality management of pharmacovigilance inspection process

Quality of the pharmacovigilance inspection process is managed by the national medicines authorities and covered by their pharmacovigilance systems and associated quality systems, meaning that the process is also subject to audit. Guidance on establishment and maintenance of a quality assured pharmacovigilance system is provided in Module I.

III.C. Operation of pharmacovigilance inspections in Arab Countries

III.C.1.Role of the national medicines authorities

National medicines authority should establish the legal and administrative framework within which pharmacovigilance inspections operate, including the definition of the rights of inspectors for inspecting pharmacovigilance sites and access to pharmacovigilance data.

National medicines authority should provide sufficient resources and appoint adequately qualified inspectors to ensure effective determination of compliance with good pharmacovigilance practice. The inspector(s) appointed may be accompanied, when needed, by expert(s) on relevant areas.

Pharmacovigilance inspections should be planned, coordinated, conducted, reported on, followed-up and documented in accordance with national inspection procedures. The scheduling and conduct of these inspections will be driven by the preparation of inspection programmes based on a systematic and risk-based approach as outlined in III.B.2.

III.C.1.1. Inspection Programs

A programme for routine inspections for authorised products in an Arab Country will be determined by its medicines authority. These inspections will be prioritised based on the potential risk to public health, considering the factors listed in III.B.5. As a general approach, a marketing authorisation holder should be inspected on the basis of risk-based considerations, but it is recommended to routinely inspect MAH at least once every 4 years.

If the same pharmacovigilance system is used for a variety of authorisations, then the results of a medicines authority inspection may be applicable for all products covered by that system.

This routine inspection programme will be separate from any "for cause" inspections, but if a "for cause" inspection takes place it may replace the need for one under this programme, dependent on its scope.

The national medicines authority is also responsible for the planning and coordination of pharmacovigilance inspections in order to ensure compliance with the national legislation and to verify the effectiveness of the marketing authorisation holder's pharmacovigilance system.

Based on the information from other inspections, the national medicines authority will prioritise the inspections in its programme and will use the information for the preparation of an appropriate scope for the inspection. For example, the national medicines authority may seek to verify the fulfilment of requirements concerning the implementation of specific risk-minimisation measures, communications concerning safety, locally conducted safety studies, or issues linked to national health care systems. A broader examination of pharmacovigilance applied to particular products of national interest may also be appropriate.

III.C.1.2. Cooperation and Sharing of information

The national medicines authorities in Arab Countries are encouraged to cooperate regarding pharmacovigilance inspections and in particular the following as applicable:

- **Training**: where possible, improvement of inspection conduct may be promoted by sharing of experience and training by national medicines authorities in the Arab Countries.
- **Joint pharmacovigilance inspection**: a national medicines authority may (if needed) request joint PhV inspection from medicines authority of another Arab Country (for marketing authorisation holders existing in these two Arab Countries to minimise duplication). In this case, access to the inspection sites and data by the joined medicines authority is desirable.
- **Exchange of information**: the national medicines authorities, when preparing inspection programmes, it may be helpful to verify the inspection status of the marketing authorisation holders they plan to inspect by considering the information (if any) shared on planned or conducted inspections under the programmes in other Arab Country e.g.
  - Information exchange on inspections planned and conducted in order to avoid the may be unnecessary repetition and duplication of activities in the same territory and optimise the inspection resources.
  - Information exchange on the scope of the inspection in order to focus current/future

inspections (with regard to objective, scope and timing).

- Information exchange on the outcome of the inspection, in particular when the outcome is that the marketing authorisation holder does not comply with the requirements laid down in legislation and relevant guidance. A summary of the critical and/or major findings and a summary of the corresponding corrective and preventive actions with their follow-up(s) may be exchanged.

III.C.2. Role of the Marketing Authorisation Holders and Applicants

Marketing authorisation holders with authorised products and applicants who have submitted new applications subject to pharmacovigilance inspections (see III.B.1). Therefore both have responsibilities in relation to inspections, including but not limited to the following:

- Always to be inspection-ready as inspections may be unannounced.
- To maintain and make available to the inspectors on request, no later than 14 days after the receipt of a request, the pharmacovigilance system master file.
- To ensure that the sites selected for inspection, which may include firms employed by the marketing authorisation holder (third party) to perform pharmacovigilance activities, agree to be inspected before the inspection is performed.
- To make available to the inspectors any information and/or documentation required for the preparation of the inspection within the deadline given or during the conduct of the inspection.
- To ensure that relevant staff involved in pharmacovigilance activities or related activities are present and available during the inspection for interviews or clarification of issues identified.
- To ensure that relevant pharmacovigilance data is accessible
- To ensure that appropriate and timely corrective and preventive action plans are implemented to address findings observed during an inspection, with appropriate prioritisation of critical and/or major findings.

III.C.3. Inspection Fees

For pharmacovigilance inspections; an inspection fee(s) (and inspectors' expenses where applicable) may be charged depending on the national regulation requirements of the Arab Country carrying out the inspection.

Guideline on good pharmacovigilance practices (GVP)
For Arab Countries

GVP: Modules

Module IV – Pharmacovigilance audits

IV.A. Introduction

For the purposes of this module reference to pharmacovigilance audit(s) and pharmacovigilance audit activity(ies) are deemed to include pharmacovigilance system audits and audit(s) of the quality system for pharmacovigilance activities.

The overall description and objectives of pharmacovigilance systems and quality systems for pharmacovigilance activities are referred to in Module I, while the specific pharmacovigilance processes are described in each respective Module of GVP.

In this Module, all applicable legal requirements are referenced by the modal verb "shall". Guidance for the implementation of legal requirements is provided using the modal verb "should".

This Module provides guidance on planning and conducting the legally required audits, the role, context and management of pharmacovigilance audit activity. This Module is intended to facilitate the performance of pharmacovigilance audits, especially to promote harmonisation, and encourage consistency and simplification of the audit process. The principles in this Module are aligned with internationally accepted auditing standards, issued by relevant international auditing standardisation organisations[5] and support a risk-based approach to pharmacovigilance audits.

Section IV.B. outlines the general structures and processes that should be followed to identify the most appropriate pharmacovigilance audit engagements and describes the steps which can be undertaken by marketing authorisation holders to plan, conduct and report upon an individual pharmacovigilance audit engagements. This Section also provides an outline of the general quality system and record management practices for pharmacovigilance audit processes.

Section IV.C. provides an outline of the operation in the Arab Countries in respect of pharmacovigilance audits.

IV.A.1. Terminology

Audit, Audit findings, Audit plan, Audit programme, Audit recommendations, Upper management: see in GVP Annex I.

Auditee: [entity] being audited (ISO 19011 (3.7) [6]).

Compliance: Conformity and adherence to policies, plans, procedures, laws, regulations, contracts, or other requirements (*IIA International Standards for the Professional Practice of Internal Auditing* [6]).

[5] For more details regarding **The Institute of Internal Auditors** (IIA) see www.theiia.org;
the **International Organisation for Standardisation** (ISO) see www.iso.org ;
Information Systems Audit and Control Association (ISACA) see www.isaca.org ;
The International Auditing and Assurance Standards Board (IAASB) see www.ifac.org ;
The International Organisation of Supreme Audit Institutions (INTOSAI) see www.issai.org .

[6] **The Institute of Internal Auditors** (IIA) see www.theiia.org

Control(s): Any action taken by management and other parties to manage risk and increase the likelihood that established objectives and goals will be achieved. Management plans, organises, and directs the performance of sufficient actions to provide reasonable assurance that objectives and goals will be achieved (*IIA International Standards for the Professional Practice of Internal Auditing* [6]).

Evaluation (of audit activities): Professional auditing bodies promote compliance with standards, including in quality assurance of their own activities, and codes of conduct, which can be used to address adequate fulfilment of the organisation's basic expectations of Internal Audit activity and its conformity to internationally accepted auditing standards.

Finding(s): see Audit findings

Head of the organisation: see Upper management

Auditors' independence: The freedom from conditions that threaten objectivity or the appearance of objectivity. Such threats to objectivity must be managed at the individual auditor, engagement, functional and organisational levels *(IIA International Standards for the Professional Practice of Internal Auditing* [6]*).*

Internal Control: Internal control is an integral process that is effected by an entity's management and personnel and is designed to address risk and provide reasonable assurance that in pursuit of the entity's mission, the following general objectives are being achieved: executing orderly, ethical, economical, efficient and effective operations, fulfilling accountability obligations, complying with applicable laws and regulations and safeguarding resources against loss, misuse and damage (for further information refer to COSO standards).

International Auditing Standards: issued by International Auditing Standardisation Organisations*.

International Auditing Standardisation Organisations: More details regarding:
The Institute of Internal Auditors (IIA) standards can be found at http://www.theiia.org/guidance/standards-and-guidance/ippf/standards/full-standards;
The **International Organisation for Standardisation** (ISO) standard 19011 "Guidelines for quality and/or environmental management systems auditing. http://www.iso.org/iso/home.html;
Information Systems Audit and Control Association (ISACA) standards can be found at http://www.isaca.org/Standards;
The International Auditing and Assurance Standards Board (IAASB) standards can be found at http://www.ifac.org/auditing-assurance/clarity-center/clarified-standards;
The International Organisation of Supreme Audit Institutions (INTOSAI) can be found at http://www.issai.org/composite-347.htm.

Auditors' objectivity: An unbiased mental attitude that allows internal auditors to perform engagements in such a manner that they have an honest belief in their work product and that no significant quality compromises are made. Objectivity requires internal auditors not to subordinate their judgment on audit matters to that of others (*IIA International Standards for the Professional Practice of Internal Auditing* [6]).

IV.B. Structures and processes

IV.B.1. Pharmacovigilance audit and its objective

Pharmacovigilance audit activities should verify, by examination and evaluation of objective evidence, the appropriateness and effectiveness of the implementation and operation of a pharmacovigilance system, including its quality system for pharmacovigilance activities.

In general, an audit is a systematic, disciplined, independent and documented process for obtaining evidence and evaluating the evidence objectively to determine the extent to which the audit criteria are fulfilled, contributing to the improvement of risk management, control and governance processes. Audit evidence consists of records, statements or other information, which are relevant to the audit criteria and verifiable. Audit criteria are, for each audit objective, the standards of performance and control against which the auditee and its activities will be assessed. In the context of pharmacovigilance, audit criteria should reflect the requirements for the pharmacovigilance system, including its quality system for pharmacovigilance activities, as found in the legislation and guidance.

IV.B.2. The risk-based approach to pharmacovigilance audits

A risk-based approach is one that uses techniques to determine the areas of risk, where risk is defined as the probability of an event occurring that will have an impact on the achievement of objectives, taking account of the severity of its outcome and/or likelihood of non-detection by other methods. The risk-based approach to audits focuses on the areas of highest risk to the organisation's pharmacovigilance system, including its quality system for pharmacovigilance activities. In the context of pharmacovigilance, the risk to public health is of prime importance. Risk can be assessed at the following stages:

- strategic level audit planning resulting in an audit strategy (long term approach), which should be endorsed by upper management;
- tactical level audit planning resulting in an audit programme, setting audit objectives, and the extent and boundaries, often termed as scope, of the audits in that programme; and
- operational level audit planning resulting in an audit plan for individual audit engagements, prioritising audit tasks based on risk and utilising risk-based sampling and testing approaches, and reporting of audit findings in line with their relative risk level and audit recommendations in line with the suggested grading system [see IV.B.2.3.2.]

Risk assessment should be documented appropriately for the strategic, tactical and operational planning of pharmacovigilance audit activity in the organisation (see IV.B.2.1., IV.B.2.2. and IV.B.2.3. respectively).

IV.B.2.1.Strategic level audit planning

The audit strategy is a high level statement of how the audit activities will be delivered over a period of time, longer than the annual programme, usually for a period of 2-5 years. The audit strategy includes a list of audits that could reasonably be performed. The audit strategy is used to outline the areas highlighted for audit, the audit topics as well as the methods and assumptions (including e.g. risk assessment) on which the audit programme is based.

The audit strategy should cover the governance, risk management and internal controls of all parts of the pharmacovigilance system including:

- all pharmacovigilance processes and tasks;
- the quality system for pharmacovigilance activities;
- interactions and interfaces with other departments, as appropriate;
- pharmacovigilance activities conducted by affiliated organisations or activities delegated to another organisation (e.g. regional reporting centres, MAH affiliates or third parties, such as contract organisations and other vendors).

This is a non-prioritised, non-exhaustive list of examples of risk factors that could be considered for the purposes of a risk assessment:

- changes to legislation and guidance;
- major re-organisation or other re-structuring of the pharmacovigilance system, mergers, acquisitions (specifically for marketing authorisation holders, this may lead to a significant increase in the number of products for which the system is used);
- change in key managerial function(s);
- risk to availability of adequately trained and experienced pharmacovigilance staff, e.g. due to significant turn-over of staff, deficiencies in training processes, re-organisation, increase in volumes of work;
- significant changes to the system since the time of a previous audit, e.g. introduction of a new database(s) for pharmacovigilance activities or of a significant upgrade to the existing database(s), changes to processes and activities in order to address new or amended regulatory requirements;
- first medicinal product on the market (for a marketing authorisation holder);
- medicinal product(s) on the market with specific risk minimisation measures or other specific safety conditions such as requirements for additional monitoring;
- criticality of the process, e.g.:
  - for national medicines authorities: how critical is the area/process to proper functioning of the pharmacovigilance system and the overall objective of safeguarding public health;
  - for marketing authorisation holders: how critical is the area/process to proper functioning of the pharmacovigilance system. When deciding when to audit an affiliate or third party, the marketing authorisation holder should consider the nature and criticality of the pharmacovigilance activities that are being performed by an affiliate or third party on behalf

of the marketing authorisation holder, in addition to considering the other factors included in this list;

- outcome of previous audits, e.g. has the area/process ever been audited (if not, then this may need to be prioritised depending on criticality); if the area/process has previously been audited, the audit findings* are a factor to consider when deciding when to re-audit the area/process, including the implementation of agreed actions;
- identified procedural gaps relating to specific areas/processes;
- other information relating to compliance* with legislation and guidance, for example:
  - for national medicines authorities: information from compliance* metrics from complaints, from external sources, e.g. audits/assessments of the national medicines authority that may be conducted by external bodies;
  - for marketing authorisation holders: information from compliance* metrics from inspections see Module III, from complaints, from other external sources, e.g. audits;
- other organisational changes that could negatively impact on the area/process, e.g. if a change occurs to a support function (such as information technology support) this could negatively impact upon pharmacovigilance activities.

IV.B.2.2. Tactical level audit planning

An audit programme is a set of one or more audits planned for a specific timeframe, normally for a year. It should be prepared in line with the long term audit strategy. The audit programme should be approved by upper management with overall responsibility for operational and governance structure.

The risk-based audit programme should be based on an appropriate risk assessment and should focus on:

- the quality system for pharmacovigilance activities;
- critical pharmacovigilance processes (see for example Module I);
- key control systems relied on for pharmacovigilance activities;
- areas identified as high risk, after controls have been put in place or mitigating action taken.

The risk-based audit programme should also take into account historical areas with insufficient past audit coverage, and high risk areas identified by and/or specific requests from management and/or persons responsible for pharmacovigilance activities.

The audit programme documentation should include a brief description of the plan for each audit to be delivered, including an outline of scope and objectives.

The rationale for the timing, periodicity and scope of the individual audits which form part of the audit programme should be based on the documented risk assessment. However, risk-based pharmacovigilance audit(s) should be performed at regular intervals, which are in line with national legislative requirements.

Changes to the audit programme may happen and will require proper documentation.

IV.B.2.3. Operational level audit planning and reporting

IV.B.2.3.1. Planning and fieldwork

The organisation should ensure that written procedures are in place regarding the planning and conduct of individual audits that will be delivered. Timeframes for all the steps required for the performance of an individual audit should be settled in the relevant audit related procedures, and the organisation should ensure that audits are conducted in accordance with the written procedures, in line with this GVP Module.

Individual pharmacovigilance audits should be undertaken in line with the approved risk-based audit programme (see IV.B.2.2.). When planning individual audits, the auditor identifies and assesses the risks relevant to the area under review and employs the most appropriate risk-based sampling and testing methods, documenting the audit approach in an audit plan*.

IV.B.2.3.2. Reporting

The findings* of the auditors should be documented in an audit report and should be communicated to management in a timely manner. The audit process should include mechanisms for communicating the audit findings* to the auditee* and receiving feedback, and reporting the audit findings* to management and relevant parties, including those responsible for pharmacovigilance systems, in accordance with legal requirements and guidance on pharmacovigilance audits. Audit findings should be reported in line with their relative risk level and should be graded in order to indicate their relative criticality to risks impacting the pharmacovigilance system, processes and parts of processes. The grading system should be defined in the description of the quality system for pharmacovigilance, and should take into consideration the thresholds noted below which would be used in further reporting under the legislation as set out in section IV.C.2:

- **critical** is a fundamental weakness in one or more pharmacovigilance processes or practices that adversely affects the whole pharmacovigilance system and/or the rights, safety or well-being of patients, or that poses a potential risk to public health and/or represents a serious violation of applicable regulatory requirements.
- **major** is a significant weakness in one or more pharmacovigilance processes or practices, or a fundamental weakness in part of one or more pharmacovigilance processes or practices that is detrimental to the whole process and/or could potentially adversely affect the rights, safety or well-being of patients and/or could potentially pose a risk to public health and/or represents a violation of applicable regulatory requirements which is however not considered serious.
- **minor** is a weakness in the part of one or more pharmacovigilance processes or practices that is not expected to adversely affect the whole pharmacovigilance system or process and/or the rights, safety or well-being of patients.

Issues that need to be urgently addressed should be communicated in an expedited manner to the auditee*'s management and the upper management.

IV.B.2.4. Actions based on audit outcomes and follow-up of audits

Actions referenced in this section of the guideline, i.e., immediate action, prompt action, action within a reasonable timeframe, issues that need to be urgently addressed, or communicated in an expedited manner, are intended to convey timelines that are appropriate, relevant, and in line with the relative risk to the pharmacovigilance system. *Corrective and preventive actions to address critical and major issues should be prioritised.* The precise timeframe for action(s) related to a given critical finding, for example, may differ depending on nature of findings and the planned action(s).

The management of the organisation is responsible for ensuring that the organisation has a mechanism in place to adequately address the issues arising from pharmacovigilance audits. Actions should include root cause analysis and impact analysis of identified audit findings and preparation of a corrective and preventive action plan, where appropriate.

Upper management and those charged with governance, should ensure that effective action is implemented to address the audit findings. The implementation of agreed actions should be monitored in a systematic way, and the progress of implementation should be communicated on a periodic basis proportionate to the planned actions to upper management.

Evidence of completion of actions should be recorded in order to document that issues raised during the audit have been addressed.

Capacity for follow-up audits should be foreseen in the audit programme. They should be carried out as deemed necessary, in order to verify the completion of agreed actions.

IV.B.3. Quality system and record management practices

IV.B.3.1. Competence of auditors and quality management of audit activities

IV.B.3.1.1. Independence and objectivity of audit work and auditors

The organisation should assign the specific responsibilities for the pharmacovigilance audit activities. Pharmacovigilance audit activities should be independent. The organisation's management should ensure this independence and objectivity in a structured manner and document this.

Auditors should be free from interference in determining the scope of auditing, performing pharmacovigilance audits and communicating audit results. The main reporting line should be to the upper management with overall responsibility for operational and governance structure that allows the auditor(s) to fulfil their responsibilities and to provide independent, objective audit opinion. Auditors can consult with technical experts, personnel involved in pharmacovigilance processes, and with the person responsible for pharmacovigilance; however auditors should maintain an unbiased attitude that allows them to perform audit work in such a manner that they have an honest belief in their work product and that no significant quality compromises are made. Objectivity requires auditors not to subordinate their judgement on audit matters to that of others.

IV.B.3.1.2. Qualifications, skills and experience of auditors and continuing professional development

Auditors should demonstrate and maintain proficiency in terms of the knowledge, skills and abilities required to effectively conduct and/or participate in pharmacovigilance audit activities. The proficiency of audit team members will have been gained through a combination of education, work experience and training and, as a team, should cover knowledge, skills and abilities in:

- audit principles, procedures and techniques;
- applicable laws, regulations and other requirements relevant to pharmacovigilance;
- pharmacovigilance activities, processes and system(s);
- management system(s);
- organisational system(s).

IV.B.3.1.3. Evaluation of the quality of audit activities

Evaluation of audit work can be undertaken by means of ongoing and periodic assessment of all audit activities, auditee* feedback and self-assessment of audit activities (e.g. quality assurance of audit activities, compliance to code of conduct, audit programme, and audit procedures).

IV.B.3.2. Audits undertaken by outsourced audit service providers

Ultimate responsibility for the operation and effectiveness of the pharmacovigilance system resides within the organisation (i.e. within the national medicines authority or marketing authorisation holder). Where the organisation decides to use an outsourced audit service provider to implement the pharmacovigilance audit requirements on the basis of this GVP module and perform pharmacovigilance audits:

- the requirements and preparation of the audit risk assessment, the audit strategy and audit programme and individual engagements should be specified to the outsourced service providers, by the organisation, in writing;
- the scope, objectives and procedural requirements for the audit should be specified to the outsourced service provider, by the organisation, in writing;
- the organisation should obtain and document assurance of the independence and objectivity of outsourced service providers;
- the outsourced audit service provider should also follow the relevant parts of this GVP module.

IV.B.3.3. Retention of audit reports

Retention of the audit report and evidence of completion of action needs to be in line with the requirements stipulated in Module I section I.B.10.

IV.C. Operation in the Arab Countries: Pharmacovigilance audit policy framework

IV.C.1. Requirement to perform an audit for Marketing authorisation holders in the Arab Countries

The marketing authorisation holder in the Arab Countries is required to perform regular risk-based audit(s) of their pharmacovigilance system, including audit(s) of its quality system to ensure that the quality system complies with the quality system requirements. The dates and results of audits and follow-up audits shall be documented.

See IV.C.2. for further details of the requirements for audit reporting by the marketing authorisation holder.

IV.C.1.1. The qualified person responsible for pharmacovigilance (QPPV)/LSR

The responsibilities of the QPPV in respect of audit are provided in Module I. Furthermore, the QPPV should receive pharmacovigilance audit reports, and provide information to the auditors relevant to the risk assessment, including knowledge of status of corrective and preventive actions.

The QPPV should be notified of any audit findings relevant to the pharmacovigilance system irrespective of where the audit was conducted.

For multinational MAH; the local safety responsible (LSR) in the Arab Country where the audit to be conducted should receive pharmacovigilance audit reports, and provide information to the auditors relevant to the risk assessment, including knowledge of status of corrective and preventive actions on national level. Furthermore, the concerned LSR should be notified of any audit findings relevant to the pharmacovigilance system in the Arab Country where the audit was conducted.

IV.C.2. Requirements for audit reporting by the marketing authorisation holder in the Arab Countries

The marketing authorisation holder shall place a note concerning critical and major audit findings of any audit relating to the pharmacovigilance system in the pharmacovigilance system master file (PSMF) (see Module II). Based on the audit findings*, the marketing authorisation holder shall ensure that an appropriate plan detailing corrective and preventative action is prepared and implemented. Once the corrective and preventive actions have been fully implemented, the note may be removed. Objective evidence is required in order that any note of audit findings can be removed from the pharmacovigilance system master file (see Module II).

The marketing authorisation holders should ensure that a list of all scheduled and completed audits is kept in the annex to the pharmacovigilance system master file and that they comply with reporting commitments in line with the legislation, GVP guidance and their internal reporting policies. The dates and results of audits and follow-up audits shall be documented.

IV.C.3. Confidentiality

Documents and information collected by the internal auditor should be treated with appropriate confidentiality and discretion, and also respect national legislation on the protection of individuals with regard to the processing of personal data and on the free movement of such data.

Guideline on good pharmacovigilance practices (GVP)
For Arab Countries

GVP: Modules

Module V – Risk Management Systems (Rev 1)

V.A. Introduction

It is recognised that at the time of authorisation, information on the safety of a medicinal product is relatively limited. This is due to many factors including the relatively small numbers of subjects in clinical trials compared with the intended treatment population, restricted population in terms of age, gender and ethnicity, restricted co-morbidity, restricted co-medication, restricted conditions of use, relatively short duration of exposure and follow up, and the statistical problems associated with looking at multiple outcomes.

A medicinal product is authorised on the basis that in the specified indication(s), at the time of authorisation, the risk-benefit balance is judged to be positive for the target population. A typical medicinal product will have multiple risks associated with it and individual risks will vary in terms of severity, effect on individual patients and public health impact. However, not all actual or potential risks will have been identified at the time when an initial authorisation is sought and many of the risks associated with the use of a medicinal product will only be discovered and characterised post-authorisation. Planning of the necessary pharmacovigilance activities to characterise the safety profile of the medicinal product will be improved if it is more closely based on specific issues identified from pre- or post-authorisation data and from pharmacological principles.

However, the purpose of risk identification and characterisation is to allow for risk minimisation or mitigation wherever possible. Therefore, risk management has three stages which are inter-related and re-iterative:

1. characterisation of the safety profile of the medicinal product including what is known and not known;
2. planning of pharmacovigilance activities to characterise risks and identify new risks and increase the knowledge in general about the safety profile of the medicinal product;
3. planning and implementation of risk minimisation and mitigation and assessment of the effectiveness of these activities.

Historically, risk management systems for medicinal products for human use was based solely on managing risks. However, when considering how to maximise, or indeed assess, the risk-benefit balance, risks need to be understood in the context of benefit. In assessing the risk-benefit balance at the time of authorisation, the assumption is made that these benefits and risks apply to the whole target population. However, there may be subsets of patients for whom the risk is greater than that for the target population as a whole, or in whom the benefit may not be as great. In addition, efficacy in the clinical trial setting may not reflect the true effectiveness of the medicinal product in everyday medical practice and so the risk-benefit balance of a medicinal product as assessed at the time of authorisation will inevitably change post-authorisation. Both post-authorisation safety studies and post-authorisation efficacy studies may be a condition of the marketing authorisation in certain circumstances and for these studies they shall be included in the risk management plan (RMP).

Risk management is a global activity. However, because of differences in indication and healthcare systems, target populations may be different across the world and risk minimisation activities will need to be tailored to the system in place in a particular country or global region. In addition,

differences in disease prevalence and severity, for example, may mean that the benefits of a medicinal product may also vary between regions. Therefore a product may have different versions of a RMP for each region although there will be core elements which are common to all. For example much of the safety specification will be the same regardless of where the medicinal product is being used but the epidemiology of the disease may vary between e.g. Africa and Europe, and there may be additional or fewer safety concerns depending upon the target population and indication.

Risk management, is applicable to medicinal products at any point in their lifecycle. However, this module concentrates on peri- and post-authorisation risk management.

The risks addressed in this guidance are those related to non-clinical and clinical safety. In addition, quality issues may be relevant if they impact on the safety and/or efficacy of the product. Where the disposal of the product might pose a particular risk because of remaining active substance (e.g. patches) this should also be addressed.

Although this module includes the principles of risk minimisation, and details of routine risk minimisation measures, more detail on, in particular, additional risk minimisation tools and the measurement of the effectiveness of risk management can be found in Module XVI.

V.B. Structures and processes

V.B.1. Terminology

Identified risk

An untoward occurrence for which there is adequate evidence of an association with the medicinal product of interest. Examples include:

- an adverse reaction adequately demonstrated in non-clinical studies and confirmed by clinical data;
- an adverse reaction observed in well-designed clinical trials or epidemiological studies for which the magnitude of the difference compared with the comparator group, on a parameter of interest suggests a causal relationship;
- an adverse reaction suggested by a number of well-documented spontaneous reports where causality is strongly supported by temporal relationship and biological plausibility, such as anaphylactic reactions or application site reactions.

In a clinical trial, the comparator may be placebo, active substance or non-exposure.

Potential risk

An untoward occurrence for which there is some basis for suspicion of an association with the medicinal product of interest but where this association has not been confirmed. Examples include:

- toxicological findings seen in non-clinical safety studies which have not been observed or resolved in clinical studies;
- adverse events observed in clinical trials or epidemiological studies for which the magnitude of

the difference, compared with the comparator group (placebo or active substance, or unexposed group), on a parameter of interest raises a suspicion of an association, but is not large enough to suggest a causal relationship;

- a signal arising from a spontaneous adverse reaction reporting system;
- an event known to be associated with other active substances within the same class or which could be expected to occur based on the properties of the medicinal product.

Missing information

Gaps in knowledge about a medicinal product, related to safety or use in particular patient populations, which could be clinically significant..

Examples of missing information include populations not studied (e.g. pregnant women or patients with severe renal impairment) or where there is a high likelihood of off-label use.

Important identified risk and important potential risk

An identified risk or potential risk that could have an impact on the risk-benefit balance of the product or have implications for public health.

What constitutes an important risk will depend upon several factors, including the impact on the individual, the seriousness of the risk, and the impact on public health. Normally, any risk that is likely to be included in the contraindications or warnings and precautions section of the product information should be considered important.

Risk management system

A set of pharmacovigilance activities and interventions designed to identify, characterise, prevent or minimise risks relating to medicinal products including the assessment of the effectiveness of those activities and interventions.

Risk management plan

A detailed description of the risk management system.

Risk minimisation activity (used synonymously with risk minimisation measure)

An intervention intended to prevent or reduce the probability of the occurrence of an adverse reaction associated with the exposure to a medicine or to reduce its severity should it occur.

Safety concern

An important identified risk, important potential risk or missing information.

Target population (treatment)

The patients who might be treated with the medicinal product in accordance with the indication(s) and contraindications in the authorised product information.

V.B.2. Principles of risk management

The overall aim of risk management is to ensure that the benefits of a particular medicinal product (or a series of medicinal products) exceed the risks by the greatest achievable margin for the individual patient and for the target population as a whole. This can be done either by increasing the benefits or by reducing the risks. Although the primary aim and focus of the RMP remains that of risk management, the evaluation of the need for efficacy studies (including those linked to the Safety Specification section on Missing Information) and their integration, where necessary, in the RMP may enable resources to be used more efficiently and for risks to be put into context. The RMP therefore includes the planning of such studies and is without prejudice to the specific efficacy guidance and measures foreseen in local regulations.

The principles of risk management are the same regardless of stakeholder or territory (see below).

Figure V.1. The risk management cycle

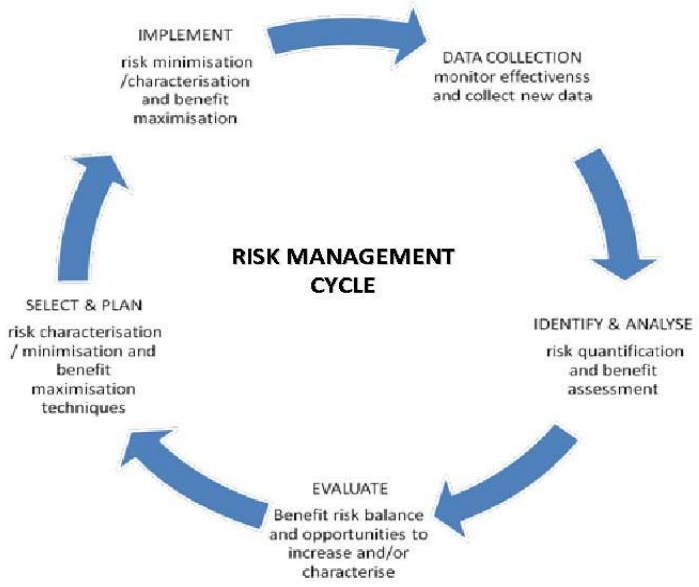

However, the actions and responsibilities within each step of the cycle will vary according to whether the stakeholder is an applicant/marketing authorisation holder, medicines authority, healthcare professional or patient. Other players may be involved in risk-benefit management such as: patient organisations, learned societies, health economists, health authorities, national safety organisations, environmental advisors, occupational health professionals and pharmaceutical distributors but their roles will usually be smaller and complementary to that of the main players.

For applicants/marketing authorisation holders and medicines authorities in the Arab Countries, there should be specific mention of risk management in the national legislation. In the Arab Countries, the primary document and process for risk management adheres to the principles in the International Conference for Harmonisation (ICH) Guideline E2E on Pharmacovigilance Planning. Some other territories may have local legislation enshrining either risk management in general or

adopting the specific ICH E2E guidance or have developed local guidance. For healthcare professionals, product information, medical treatment guidelines and any materials produced by marketing authorisation holders, medicines authority will direct prescribing, dispensing, treatment and management of both benefit and risks. For patients, the majority of medicinal products will be prescribed by doctors and dispensed by pharmacists so that management of benefits and risks will primarily involve complying with treatment schedules and recommendations, being aware of important risks and what actions to take, and reporting to their doctor, pharmacist, and national medicines authority any untoward effects. However, in some countries patients may buy medicines directly without guidance from healthcare practitioners so will need to understand the potential benefits and risks of the product and what measures they need to comply with to use the medicine safely and effectively. Whatever the setting, patients who understand the potential benefits and risks of a medicinal product are better equipped to decide whether or not to be treated and to comply with suggested risk minimisation activities.

V.B.3. Responsibilities for risk management within an organisation

The principle organisations directly involved in medicinal products' risk management planning are applicants/marketing authorisation holders and the medicines authorities who regulate them.

V.B.3.1. Marketing authorisation holders and applicants

In relation to risk management of its medicinal products, an applicant/marketing authorisation holder is responsible for:

- ensuring that it constantly monitors the risks of its medicinal products in compliance with relevant legislation and reports the results of this, as required, to the appropriate medicines authorities;
- taking all appropriate actions to minimise the risks of the medicinal product and maximise the benefits including ensuring the accuracy of all information produced by the company in relation to its medicinal products, and actively updating and promptly communicating it when new information becomes available;

Other Modules within GVP deal with specific aspects of the above so this Module is confined to the risk management plan and its contents.

ICH-E2E defines two basic parts of a RMP: the safety specification and the pharmacovigilance plan. It does not include risk minimisation. However it was acknowledged at the time of development of ICH-E2E that risk minimisation was an integral part of risk management planning. Details of how the safety specification and pharmacovigilance plan are integrated within the RMP and the detailed structure and format are provided in V.B.5 to V.B.7.

Producing a RMP requires the input of different specialists and departments within and/or outside an organisation. The safety specification may require involvement of toxicologists, clinical pharmacologists, clinical research physicians, pharmacoepidemiologists and pharmacovigilance experts. The input required for the pharmacovigilance plan may require any of these experts depending upon the safety concerns identified in the safety specification and the types of activities planned to address them. The design of risk minimisation activities should involve people with

expertise in communication and, where appropriate, patients and/or healthcare professionals. **Since a risk management plan is primarily a pharmacovigilance document, ideally the production of it should be managed by personnel with appropriate pharmacovigilance training in either the pharmacovigilance or regulatory departments**, depending upon company structure. Regardless of who prepares the RMP, the responsibility for the content and accuracy of the RMP remains with the marketing authorisation applicant/holder who should ensure oversight by someone with the appropriate scientific background within the company.

Further guidance on individual risk minimisation activities is provided in Module XVI.

V.B.3.2. Medicines authorities

The general responsibilities of medicines authorities are discussed in Module I. In relation to risk management, the principal responsibilities of medicines authorities are:

- constantly monitoring the benefits and risks of medicinal products including assessing the reports submitted by pharmaceutical companies, healthcare professionals, patients and, where appropriate, other sources of information;
- taking appropriate regulatory actions to minimise the risks of the medicinal product and maximise the benefits including ensuring the accuracy and completeness of all information produced by the company in relation to its medicinal products;
- ensuring the implementation of risk minimisation activities at a national level;
- effectively communicating with stakeholders when new information becomes available. This includes providing information in an appropriate format to patients, healthcare physicians, patient groups, learned societies;
- when necessary, ensuring that marketing authorisation holders of generic and/or similar biological medicinal products make similar changes to their risk minimisation measures when changes are made to those of reference medicinal product;
- providing information to other regulatory authorities, this includes notification of any safety activities in relation to a product, including changes to the product information of originator and/or reference medicinal products.

Many of the associated tasks and activities are described elsewhere in GVP and in other scientific guidances. One of the principle tasks of regulatory authorities in relation to risk management is the assessment of risk management plans. The different parts of the RMP need different areas of expertise so ideally assessment of risk management plans should be performed by a multi-disciplinary team. How this can be achieved will depend upon the organisational structure of the medicines authority but could include multi-disciplinary meetings or pharmacovigilance experts reviewing RMPs alongside expert assessment reports relating to different sections of the submitted dossier.

V.B.4. Objectives of a risk management plan

The RMP must contain the following elements which:

- identify or characterise the safety profile of the medicinal product(s) concerned;
- indicate how to characterise further the safety profile of the medicinal product(s) concerned;
- document measures to prevent or minimise the risks associated with the medicinal product including an assessment of the effectiveness of those interventions;
- document post-authorisation obligations that have been imposed as a condition of the marketing authorisation.

There is an implicit requirement that to fulfil these obligations a RMP should also:

- describe what is known and not known about the safety profile of the concerned medicinal product(s);
- indicate the level of certainty that efficacy shown in clinical trial populations will be seen when the medicine is used in the wider target populations seen in everyday medical practice and document the need for studies on efficacy in the post-authorisation phase (also known as effectiveness studies);
- include a description of how the effectiveness of risk minimisation measures will be assessed.

The RMP is a dynamic, stand-alone document which should be updated throughout the life-cycle of the products. For products' periodic safety update reports (PSURs), certain (parts of) modules may be used for both purposes (see V.B.14.).

V.B.5. Structure of the risk management plan

The RMP consists of seven parts. Certain parts of the RMP, in particular the safety specification, are subdivided into modules so the content can be tailored to the specifics of the medicinal product and modules added/removed or re-used in other documents (e.g. PSURs). RMP part II modules generally follow the section titles in the Safety Specification of ICH-E2E, whilst RMP part III follows the Pharmacovigilance Plan. Differences between indications, formulations and target populations, if several medicinal products have the same active substance, will be similarly accommodated by dividing the relevant parts of the RMP into modules and/or sections. The modular structure also means that the RMP can be updated easily. As the product matures, some RMP modules or sections may cease changing – for example non clinical studies may stop at a certain time as may clinical trials. These RMP modules can be effectively "locked" until new data needs to be added. In addition, certain RMP modules may be omitted in specific circumstances (see V.C.3.1.).

The submitted RMP should follow the RMP template (see Annex II of this document). The amount of information, particularly in RMP part II, which can be provided will depend on the type of medicinal product and where it is in its lifecycle but this guidance provides an overview of the level of information needed and its format.

The risk management system shall be proportionate to the identified risks and the potential risks of

the medicinal product, and the need for post-authorisation safety data. This proportionality can be achieved in different ways: by reducing the number of modules which need to be submitted for products meeting certain conditions (such as well-established products/generics see table V.3), and by ensuring that requirements for post-authorisation studies and risk minimisation activities reflect the important risks and important uncertainties of the product.

An overview of the parts and modules of the RMP is provided below:

Figure V.2. Overview of the parts and modules of the RMP

Part I Product(s) overview

Part II Safety specification

- **Module SI** Epidemiology of the indication(s) and target population(s)
- **Module SII** Non-clinical part of the safety specification
- **Module SIII** Clinical trial exposure
- **Module SIV** Populations not studied in clinical trials
- **Module SV** Post-authorisation experience
- **Module SVI** Additional requirements for safety specification in Arab country concerned
- **Module SVII** Identified and potential risks
- **Module SVIII** Summary of the safety concerns

Part III Pharmacovigilance plan

Part IV Plans for post-authorisation efficacy studies

Part V Risk minimisation measures (including evaluation of the effectiveness of risk minimisation measures)

Part VI Summary of the risk management plan

Part VII Annexes

Where a RMP concerns more than one medicinal product, **a separate RMP part VI must be provided for each medicinal product**.

Information should be provided in enough detail to enable an assessor to understand the issues being presented. Unless specifically mentioned in this guidance, cross references to other parts of the dossier should be avoided since it is intended that the RMP should be a largely stand-alone document that is a scientific synopsis of the relevant parts of the dossier, emphasising the important clinically relevant facts. To aid consistency between the information provided in the common technical document (CTD) and the RMP, the table below indicates the location of information in the CTD is summarised for the RMP:

Table V.1 Mapping between RMP modules and CTD

RMP	CTD
Part I Active substance information	Module 2.3 Quality overall summary Module 3 Quality
Module SI Epidemiology of the target population	Module 2.5 Clinical overview
Module SII Non-clinical part of safety specification	Module 2.4 Non-clinical overview Module 2.6 Non-clinical written and tabulated summaries Module 4 Non-clinical study reports
Module SIII Clinical trial exposure	Module 2.7 Clinical summary - briefly Module 5 Clinical Study reports
Module SIV Populations not studied in clinical trials	Module 2.5 Clinical overview
Module SV Post authorisation experience	Module 2.5 Clinical overview - briefly
Module SVII Identified and potential risks	Module 2.5 Clinical overview (including benefit risk conclusion) Module 2.7 Clinical summary (SPC)
Module SVIII Summary of the safety concerns	Module 2.5 Clinical overview Module 2.7 Clinical summary
Part III Pharmacovigilance activities	Module 2.5 Clinical overview Module 2.7 Clinical summary
Part IV Plans for post authorisation efficacy studies (including presentation of efficacy data)	Module 2.5 Clinical overview Module 2.7 Clinical summary
Part V Risk minimisation measures	Module 2.5 Clinical overview Module 2.7 Clinical summary

Copies of literature referenced in the RMP should be included in RMP annex 12.

V.B.6. Detailed description of each part of the risk management plan

The description of the parts and modules of a RMP provide guidance on the main topics which should be covered within each specific area. However, some sections may not be relevant to all medicinal products and there may be additional topics which need to be included but are not

mentioned. The RMP is part of the scientific dossier of a product and as such should be scientifically based and not be promotional.

In consistency with the European categorization of medicinal products; certain products for human medicinal use are categorised as advanced therapy medicinal products (ATMPs). . These products are broadly comprise:

- gene therapy medicinal products;
- somatic cell therapy medicinal products;
- tissue engineered products.

Because of the nature of these products, risks may occur which are not normally a consideration with other medicinal products including risks to living donors, risks of germ line transformation and transmission of vectors. For this reason, for ATMPs, RMP module VII *Identified and potential risks (ATMP)* should replace RMP module VII *Identified and potential risks* as this provides greater flexibility in consideration of the additional risks.

V.B.7. RMP part I "Product overview"

This should provide the administrative information on the RMP and an overview of the product(s) covered within it.

The information should include:

Active substance information:

- active substance(s);
- pharmacotherapeutic group(s) (ATC code);
- name of marketing authorisation holder or applicant;
- date and country of first authorisation worldwide (if applicable);
- date and country of first launch worldwide (if applicable);
- number of medicinal product(s) to which this RMP refers.

Administrative information on the RMP:

- data lock point of the current RMP;
- date submitted and the version number;
- list of all parts and modules of the RMP with date and version of the RMP when the part/module was last updated and the RMP was last submitted.

and

for each medicinal product included in the RMP:

- authorisation procedure (central, mutual recognition, decentralised, national); (if applicable i.e. only for multinational MAH/MAA with the product authorised in EU)
- invented name(s) in the Arab County concerned;

- brief description of the product including:
  - chemical class;
  - summary of mode of action;
  - important information about its composition (e.g. origin of active substance of biologicals, relevant adjuvants or residues for vaccines);
- indications:
  - current (if applicable) in the Arab Country concerned **versus**;

    current in the EEA (for multinational MAH/MAA with the product authorised in EU) or current of the reference medicinal product in the EEA (for generics);
  - proposed (if applicable) in the Arab Country concerned **versus**;
- proposed in the EEA (for multinational MAH/MAA with the product authorised in EU) or current of the reference medicinal product in the EEA (for generics);
- dosage:
  - current (if applicable) in the Arab Country concerned **versus**;

    current in the EEA (for multinational MAH/MAA with the product authorised in EU) or current of the reference medicinal product in the EEA (for generics);
  - proposed (if applicable) in the Arab Country concerned **versus**;

    proposed in the EEA (for multinational MAH/MAA with the product authorised in EU) or current of the reference medicinal product in the EEA (for generics);
- pharmaceutical forms and strengths:
  - current (if applicable) in the Arab Country concerned **versus**;

    current in the EEA (for multinational MAH/MAA with the product authorised in EU) or current of the reference medicinal product in the EEA (for generics);
  - proposed (if applicable) in the Arab Country concerned **versus**;

    proposed in the EEA (for multinational MAH/MAA with the product authorised in EU) or current of the reference medicinal product in the EEA (for generics);
- whether the product is the subject of additional monitoring.

V.B.8. RMP part II "Safety specification"

The purpose of the safety specification is to provide a synopsis of the safety profile of the medicinal product(s) and should include what is known and not known about the medicinal product(s). It should be a summary of the important identified risks of a medicinal product, important potential risks, and missing information. Missing information is defined as: gaps in knowledge about a medicinal product, related to safety or use in particular patient populations, which could be clinically significant (see Annex I). It should also address the populations potentially at risk (where

the product is likely to be used i.e. both labelled and off-labelled use), and outstanding safety questions which warrant further investigation to refine understanding of the risk-benefit balance during the post-authorisation period. In the RMP, the safety specification will form the basis of the pharmacovigilance plan, and the risk minimisation plan.

The safety specification consists of eight RMP modules of which RMP modules SI-SV, SVII and SVIII correspond to safety specification headings in ICH-E2E. **RMP module SVI includes additional elements required to be submitted in the Arab Countries**.

Module SI	Epidemiology of the indication(s) and target population(s)
Module SII	Non-clinical part of the safety specification
Module SIII	Clinical trial exposure
Module SIV	Populations not studied in clinical trials
Module SV	Post-authorisation experience
Module SVI	Additional requirements for the safety specification in the Arab country concerned
Module SVII	Identified and potential risks
Module SVIII	Summary of the safety concerns

RMP modules SIII–SV form the "Limitations of the human safety database" part of the ICH-E2E safety specification and these, with the addition of RMP modules SI and SVII form the clinical part of the safety specification. RMP modules SVI and the ATMP version of SVII are EU specific although the topics may apply in any territory; therefore; they are adopted in this guideline and required in the Arab Countries.

The applicants/marketing authorisation holders should follow the structure of elements provided below when compiling the safety specification. The safety specification can include additional elements, depending on the nature of the product and its development programme. Elements which might need to be incorporated include:

- quality aspects if relevant in relation to the safety and efficacy of the product;
- the disposal of the product where it might pose a particular risk because of remaining active substance (e.g. patches);
- innovative pharmaceutical forms; or
- use with a medical device.

V.B.8.1. RMP module SI "Epidemiology of the indications and target population"

The epidemiology of the indication(s) should be discussed. This discussion should include incidence, prevalence, mortality and relevant co-morbidity, and should whenever possible be stratified by age, sex, and racial and/or ethnic origin. Differences in the epidemiology in the different regions should be discussed, where feasible, (because the epidemiology of the

indication(s) may vary across regions), but the emphasis should be on the epidemiology in the Arab County concerned of the proposed indication.

Information should be provided on the important co-morbidities in the target population. For example: if a medicinal product is intended for treating prostate cancer, the target population is likely to be men over the age of 50 years. Men over the age of 50 are also at risk of myocardial infarction. To identify whether a medicinal product might be increasing the risk of myocardial infarction, it is important to know how many cases would be expected amongst prostate cancer patients (ideally) or men in the same age group, not taking the medicinal product. Estimation of the risk in the target population, as compared with the same age/sex group in the general population may be particularly important if the disease itself increases the risk of a particular adverse event.

The RMP should include a statement of the intended purpose and impact of the product e.g. whether it is intended to prevent disease, to prevent particular serious outcomes due to a condition or to reduce progression of a chronic disease.

V.B.8.2. RMP module SII "Non-clinical part of the safety specification"

This RMP module should present a summary of the important non-clinical safety findings, for example:

- toxicity (key issues identified from e.g. repeat-dose toxicity, reproductive/developmental toxicity, nephrotoxicity, hepatotoxicity, genotoxicity, carcinogenicity);
- general pharmacology (e.g. cardiovascular, including QT interval prolongation, nervous system);
- drug interactions;
- other toxicity-related information or data.

What constitutes an important safety finding will depend upon the medicinal product, the target population and experience with other similar compounds or therapies in the same class. Normally significant areas of toxicity (by target organ system), and the relevance of the findings to the use in humans, should be discussed. Also quality aspects if relevant to safety (e.g. important information on the active substance or its impurities, e.g. genotoxic impurities) should be discussed. If a product is intended for use in women of childbearing age, data on the reproductive/developmental toxicity should be explicitly mentioned and the implications for use in this population discussed. Where the non-clinical safety finding could constitute an important risk to the target population, it should be included as a safety concern in RMP module SVIII.

For other special populations depending upon the indication and target population, consideration should be given to whether specific non-clinical data needs exist.

V.B.8.3. RMP module SIII "Clinical trial exposure"

In order to assess the limitations of the human safety database, data on the patients studied in clinical trials should be provided. This data should be provided in the most appropriate format, e.g. tables/graphs. The size of the study population should be detailed using both numbers of patients and, where appropriate, patient time (patient-years, patient-months) exposed to the medicinal product. This should be stratified for relevant categories and also by the type of trial (randomised

blinded trial population only and all clinical trial populations.) Stratifications would normally include:

- age and gender;
- indication;
- dose;
- racial origin (see also V.B.8.4).

Duration of exposure should be provided either graphically by plotting numbers of patients against time or in tabular format.

The exposure of special populations (pregnant women, breast-feeding women, renal impairment, hepatic impairment, cardiac impairment, sub-populations with relevant genetic polymorphisms, immuno-compromised) should be provided as appropriate. The degree of renal, hepatic or cardiac impairment should be specified as well as the genetic polymorphism.

The categories above are only suggestions and tables/graphs should be tailored to the product. For example, indication may not be a relevant stratification for a medicinal product where only one indication has been studied, and route of administration, number of courses/immunisations or repeat administrations may be important categories to be added.

When presenting age data, categories should be chosen which are relevant to the target population. Broad artificial divisions which are not clinically relevant, such as <65 and >65, should be avoided. Paediatric data should be divided by categories (e.g. ICH-E11); similarly the data on elderly patients should be considered for stratification into categories such as 65-74, 75-84 and 85+, although the age strata should reflect that of the target population. For teratogenic drugs, stratification into age categories relating to childbearing potential might be appropriate for the female population.

Unless clearly relevant, data should not be presented by individual trial but should be pooled. Totals should be provided for each table/graph as appropriate. Where patients have been enrolled in more than one trial (e.g. open label extension study following a trial) they should only be included once in the age/sex/ethnic origin tables. Where differences in the total numbers of patients arise between tables, the tables should be annotated to reflect the reasons for discrepancy.

When the RMP is being submitted with an application for a new indication, a new pharmaceutical form or route, the clinical trial data specific to the application should be presented separately at the start of the module as well as being included in the summary tables (as described above) representing pooled data across all indications.

V.B.8.4. RMP module SIV "Populations not studied in clinical trials"

RMP module SIV should discuss which sub-populations within the expected target population have not been studied or have only been studied to a limited degree in the clinical trial population. Limitations of the clinical trials should also be presented in terms of the relevance of inclusion and exclusion criteria in relation to the target population. This is particularly important when exclusion criteria are not proposed as contraindications for the drug. Lists of inclusion/exclusion criteria should not be provided by trial, but a summary of the effect of these in the overall development programme in relation to the target population should be provided. In discussing differences

between target populations and those exposed in clinical trials it should be noted that some differences may arise through trial setting (e.g. hospital or general practice) rather than through explicit inclusion/exclusion criteria.

The implications, with respect to predicting the safety of the product in the marketplace, of any of these populations with limited or no research should be explicitly discussed. In addition, the limitations of the database with regard to the detection of adverse reactions due to:

- number of patients studied;
- cumulative exposure (e.g. specific organ toxicity);
- long term use (e.g. malignancy)

should be discussed. Where the missing information could constitute an important risk to the target population, it should be included as a safety concern in RMP module SVIII.

Populations to be considered for discussion should include (but might not be limited to):

- Paediatric population

  Children (from birth to 18 years with consideration given to the different age categories as per ICH-E11, or, if justified, to other developmentally meaningful groups i.e. taking into account specific organ maturation). If paediatric development has been limited to certain age categories then the implications for other paediatric age groups should also be discussed.

- Elderly population

  Implications for use in patients over the age of 65 should be discussed – with appropriate consideration given to use in the older end of the age spectrum. The effects of particular impairments, e.g. renal, hepatic, or of concomitant disease or medication will be discussed mainly in the appropriate sections below, but discussion in this section should reflect the fact that in the elderly population many of these factors may co-exist. The cumulative effect of multiple impairments and multiple medications should be discussed. Consideration of whether particular laboratory screening should be performed routinely before use of the medicinal product(s) in the elderly should be discussed. In particular any adverse reactions which might be of special concern in the elderly e.g. dizziness or central nervous system effects should be explored.

- Pregnant or breast-feeding women

  If the target population includes women of child-bearing age, the implications for pregnancy and/or breast-feeding should be discussed. If the medicinal product is not specifically for use during pregnancy, any pregnancies which have occurred during the developmental programme and their outcomes should be discussed. For products where pregnancy should be avoided for safety reasons, , the discussion on pregnancy should also include an analysis of the reasons why the contraceptive measures in place during the clinical trials failed and the implications for use in the less controlled conditions of everyday medical practice.

- Patients with hepatic impairment
- Patients with renal impairment
- Patients with other relevant co-morbidity (e.g. cardiovascular or immunucompromised including organ transplant patients)

- Patients with disease severity different from that studied in clinical trials

  Any experience of use in patients with different disease severities should be discussed, particularly if the proposed indication is restricted to those patients with a specific disease severity.

- Sub-populations carrying known and relevant genetic polymorphism

  The extent of pharmacogenetic effects and the implications on genetic biomarker use in the target population should be discussed. Where a proposed drug indication constitutes patients with or without specific genetic markers, or the clinical development programme has been in patients with a specific mutation, the marketing authorisation holder should discuss the implications of this for the target population and explore whether use in patients with an unknown or different genotype could constitute a safety concern.

  If a potentially clinically important genetic polymorphism has been identified but not fully studied in the clinical development programme, this should be considered as missing information and/or a potential risk. This should be reflected in the safety specification and pharmacovigilance plan. Whether it is included as a safety concern for the purposes of risk minimisation will depend upon the importance of the possible clinical implications.

- Patients of different racial and/or ethnic origins

  Genetic variants can influence pharmacodynamics and pharmacokinetics, and subsequently affect the efficacy and/or safety of the administered drug. Inter-ethnic differences in drug efficacy and safety have been observed in different ethnic groups due to e.g. genetic polymorphisms.

  One example of such inter-ethnic differences is the variation in frequency of the HLA-B*1502 allele. This allele is strongly associated with the occurrence of severe cutaneous adverse reactions to carbamazepine and has a prevalence of about 10% in some Asian populations, whilst the prevalence of the allele is negligible in those of European descent. This is why genomic testing is recommended for patients of some Asian origins when carbamazepine use is planned, while this testing will not make sense for a patient who is of European descent.

  Major inter-ethnic differences in pharmacokinetics of drugs may also occur due to types and/or frequencies of gene variants coding for drug metabolising enzymes. The consequences of these inter-ethnic differences could be that the proportion of subjects with particular beneficial effects or adverse reactions varies, leading to different risk-benefit balances and specific recommendations in these ethnic populations.

  Furthermore, efficacy in patients may be affected by racial origin. One example is that ACE inhibitors are less potent in black patients of African or Caribbean family origin than in white patients.

  Therefore, information on racial origin may be relevant and valuable for evaluation of efficacy and safety and for preventing adverse reactions or improving benefits in the target population.

  The experience of drug use in patients with different racial and/or ethnic origins should be discussed including the implications on efficacy and safety, based on pharmacokinetics and pharmacodynamics, in the target population. If it is likely that efficacy or safety may be affected

by race or ethnicity, consideration should be given to including this either as a safety concern or as a topic for inclusion in RMP Part IV. Consideration should also be given as to whether post-authorisation efficacy and/or safety studies are necessary.

V.B.8.5. RMP module SV "Post-authorisation experience"

The purpose of this RMP module is to provide information on the number of patients exposed post authorisation; how the medicinal product has been used in practice and labelled and off-label use including use in the special populations mentioned in RMP module SIV. It should also include brief information on the number of patients included in completed observational studies conducted either to elucidate a safety issue or for drug utilisation purposes. Details of significant actions taken to update information on the safety of the medicinal product should also be provided in this module**.**

V.B.8.5.1. RMP module SV section "Action taken by regulatory authorities and/or marketing authorisation holders for safety reasons"

List any significant regulatory action (including those initiated by the marketing authorisation holder), in any market, taken in relation to a safety concern. Significant regulatory action would include: a restriction to the approved indication, a new contra-indication, a new or strengthened warning in section 4.4 of the SPC (or equivalent) or any action to suspend or revoke a marketing authorisation. This list should be cumulative, and specify the country, action taken and the date as appropriate. Roll-out in multiple countries of a new safety statement initiated by the MAH can be presented as one action.

When the RMP is updated, a brief description of the reasons leading to any significant actions since the last submission of the RMP should be provided. It may be appropriate to add comments if the regulatory action taken is not applicable to certain products/formulations as authorised in the Arab Country concerned.

V.B.8.5.2. RMP module SV section "Non-study post-authorisation exposure"

Where marketing of the medicinal product has occurred, the applicant/marketing authorisation holder should provide cumulative data on patients exposed post-marketing. Where possible, the information should be stratified by relevant variables. These may include age, sex, indication, dose and region (Arab Country concerned versus other countries worldwide). Depending upon the medicinal product, other variables may be relevant such as number of vaccination courses, route of administration or duration of treatment.

When deciding which measure to use for exposure data, it is important to consider the way a medicinal product is used. Exposure data based on the number of kilogrammes of medicinal product sold divided by the average dose is only valid if the medicinal product is always used at one dose level for a fixed length of time, which is not the situation with most medicinal products. In paediatric populations or mixed populations of different indications or age groups, use of this measure alone is inappropriate and other measures should be used. For example, for medicinal products used chronically, the appropriate measure may be patient years of use. However, when use is typically limited and utilisation is determined by pack size (e.g. a course of antibiotics), a simple count of packs sold may be more appropriate.

If the drug has different routes of administration, e.g. subcutaneous or oral, exposure data should be presented separately, where possible. Arabian medicines authorities may request additional stratification of exposure data, e.g. exposure in age groups or within different approved indications. However, if the drug is used in different indications with different dosing schedules or other delineating factors suitable for stratification, marketing authorisation holders should consider routinely providing such data where possible.

A more accurate breakdown of drug exposure based on market research should be provided where possible.

If a drug utilisation study has been performed, for reimbursement or other reasons, the results, as they reflect use in the real world setting, should be provided.

V.B.8.5.3. RMP module SV section "Post-authorisation use in populations not studied in clinical trials"

Where there are data on post-authorisation use in the special populations identified in RMP module SIV as having no or limited exposure, estimation of the numbers exposed and the method of calculation should be provided whether or not the usage is on- or off-label. For paediatric use, cross reference may be made to RMP section "Specific paediatric issues" in RMP module SVI (see V.B.8.6.6.). Information on the safety profile of the medicinal product in these special populations, as compared with the rest of the target population, should also be provided. In particular, any information regarding an increased or decreased benefit in a special population should be provided. Any special populations found to be at an increased or decreased risk in relation to a particular safety concern should be discussed under the specific risk in RMP module SVII but reference should be made in this section as to which risks and populations are affected.

V.B.8.5.4. RMP module SV section "Post-authorisation off-label use"

Post marketing, updates to the safety specification, should include information on Arab Country concerned off-label use; i.e. the intentional use, for a medical purpose, which is not in accordance with the authorised product information for a medicinal product. Off-label use includes use in non-authorised paediatric age categories. Unless specifically requested, it does not include use outside the Arab Country concerned in an indication authorised in that territory which is not authorised in the Arab Country concerned. Arab Countries use in clinical trials conducted as part of the marketing authorisation holder's development programme should be included only in RMP module SIII and not in this section.

Information from drug utilisation studies (or other observational studies where indication is a variable) should be provided where available. This includes drug utilisation studies which were requested by national competent authorities for purposes other than risk management. When off label use is a safety concern or a concern has been raised by the competent authorities regarding off-label use, marketing authorisation holders should attempt to quantify such use along with a description of the methods used to arrive at these figures.

V.B.8.5.5. RMP module SV section "Epidemiological study exposure"

Marketing authorisation holders should provide a listing of epidemiological studies which are, or have been, conducted to elucidate safety or efficacy issues, study drug utilisation or measure effectiveness of risk minimisation measures. This listing should include studies undertaken by the marketing authorisation holder itself or funded by them via a grant, whether specific or unconditional. Studies undertaken by a marketing partner, or where the MAH has been sent the results by a third party, should also be included. Information on the study title, study type (e.g. cohort, case control), population studied (including country and other relevant population descriptors), duration of study, number of persons in each category (e.g. cases, controls, exposure), disease as appropriate, person time (if appropriate) and study status (completed or on-going) should be provided. If a study has been published, a reference should be included in this RMP section, a synopsis should be included in RMP annex 5 and the publication provided in RMP annex 12.

V.B.8.6. RMP module SVI "Additional requirements for the safety specification"

Some safety topics were not included in ICH-E2E but are thought to be of particular interest due to either legislation or prior experience of a safety issue.

V.B.8.6.1. RMP module SVI section "Potential for harm from overdose"

Special attention should be given to medicinal products where there is an increased risk of harm from overdose, whether intentional or accidental. Examples include medicinal products where there is a narrow therapeutic margin or potential for major dose-related toxicity, and/or where there is a high risk of intentional overdose in the treated population (e.g. in depression). Where harm from overdose has occurred during clinical trials this should be explicitly mentioned. The potential for harm from overdose should be discussed in this section and, where appropriate, overdose should be included as a safety concern in RMP module SVIII and appropriate risk minimisation proposed in RMP part V.

V.B.8.6.2. RMP module SVI section "Potential for transmission of infectious agents"

The applicant/marketing authorisation holder should discuss the potential for the transmission of an infectious agent. This may be because of the nature of the manufacturing process or the materials involved. For vaccines, any potential for transmission of live virus should be discussed. For advanced therapy medicinal products a cross-reference to RMP module SVII (ATMP) may be made.

V.B.8.6.3. RMP module SVI section "Potential for misuse for illegal purposes"

The potential for misuse for illegal purposes should be considered. Misuse, as defined in GVP Module VI, refers to situations where the medicinal product is intentionally and inappropriately used not in accordance with the authorised product information. Misuse for illegal purposes has the additional connotation of an intention of misusing the medicinal product to cause an effect in another person. This includes, amongst others: the sale, to other people, of medicines for recreational purposes and use of a medicinal product to facilitate assault. If appropriate, the means of limiting this, e.g. by the use of colorants and/or flavourings in the dosage form, limited pack size

and controlled distribution should be discussed in the risk minimisation plan.

V.B.8.6.4. RMP module SVI section "Potential for medication errors"

For the purposes of the RMP, medication error refers to any unintended error in the prescribing, dispensing or administration of a medicinal product while in the control of the healthcare professional, patient or consumer. Medication errors are an important cause of morbidity and mortality and many could be prevented or mitigated. They fall broadly into 4 categories:

1. wrong medication;
2. wrong dose (including strength, form, concentration, amount);
3. wrong route of administration;
4. wrong patient

Applicants/marketing authorisation holders should consider routinely the likelihood of medication errors. In particular, they should assess, prior to marketing, common sources of medication errors. During the development phase and during the design of a medicinal product for marketing, the applicant needs to take into account potential reasons for medication error. The naming (taking into account the national Guidelines on the Acceptability of Invented Names for Human Medicinal Products in the Arab Country concerned), presentation (e.g. size, shape and colouring of the pharmaceutical form and packaging), instructions for use (e.g. regarding reconstitution, parenteral routes of administration, dose calculation) and labelling are among the items to be considered. In addition, the national Guidelines of the Label and Package Leaflet of Medicinal Products for Human Use in the Arab Country concerned should be followed.

If a product has potential for serious harm when administered by an incorrect route, consideration should be given as to how such administration can be avoided. This is particularly important when it is common practice to administer the product at the same time as other medicinal products given by the hazardous route. In this situation, medication errors should be included as a safety concern.

The need for visual (or physical) differentiation between strengths of the same medicinal product and between other medicinal products commonly administered or taken at the same time should be discussed. In addition, if there are other products containing the same active substance on the market with formulations which are not proven to be bioequivalent, measures to avoid medication error should be discussed and appropriate risk minimisation activities proposed.

When a medicinal product is likely to be used by a visually impaired population, special consideration should be given to the potential for medication error. Where appropriate, medication error should be included as a safety concern and appropriate risk minimisation measures proposed to address the possibility of medication error due to visual impairment.

Consideration should be given to the prevention of accidental ingestion or other unintended use by children.

Medication errors identified during product development including clinical trials should be discussed and information on the errors, their potential cause(s) and possible remedies given. Where applicable an indication should be given of how these have been taken into account in the final product design.

If during the post-marketing period it becomes apparent that adverse reactions are occurring as a result of medication errors, this topic should be discussed in the updated RMP and ways of limiting the errors proposed.

If the formulation or strength of a product is being changed, where appropriate, medication error should be included as a safety concern and the measures that the marketing authorisation holder will put in place to reduce confusion between old and new "product" should be discussed in the risk minimisation plan. Similarly, it may be appropriate to discuss risk minimisation activities in relation to changes to the presentation, pack size, route of administration or release characteristics of the medicinal product.

If the product is to be administered with a medical device (integrated or not), consideration should be given to any safety concerns which could represent a risk to the patient (medical device malfunction).

V.B.8.6.5. RMP module SVI section "Potential for off-label use"

The potential for off-label use should be discussed. Off-label use relates to situations where the medicinal product is intentionally used for a medical purpose not in accordance with the authorised product information. This is particularly relevant where a medicinal product has an indication restricted to a subset of the population within a disease area or there are situations where the medicinal product must not be given for safety reasons. The potential for use in other disease areas should also be considered where this is likely.

Where appropriate, use could be made of data on actual use versus authorised use in other markets and the implications for the authorisation in the Arab Country concerned discussed.

V.B.8.6.6. RMP module SVI section "Specific paediatric issues"

This section deals with aspects of paediatric use not covered in RMP module SIV.

Issues identified in paediatric investigation plans

Any recommendations for long term follow up of safety or efficacy issues in relation to paediatric use which are mentioned in the paediatric investigation plan should be detailed here. This section should clarify if, and how, this had been taken into account in RMP module SVII. If the issue has been resolved following further development, or is no longer considered of sufficient impact to justify listing as a safety concern, this should be discussed and justified.

Proposals for specific long term paediatric studies should be considered at the time of application for a paediatric indication and if felt not to be necessary justification should be provided. If an indication in adults precedes an application for paediatric use, any registries established to provide data on use of the product in real medical practice should avoid age related exclusion criteria so that any potential off-label use in the paediatric population can be included.

In some circumstances, the safety concern identified in the paediatric investigation plan may be applicable to the whole population being treated. In these cases, consideration should be given as to whether some of the pharmacovigilance activities and/or risk minimisation activities from the paediatric investigation plan are appropriate for, and should be extended to cover, the whole population. For these safety concerns, this RMP section should also include details of how the

specific paediatric aspects will be addressed and all paediatric investigation plan recommendations considered. Cross-reference may be made to RMP modules SIV and SVII and SVII.

Potential for paediatric off-label use

If the disease or disorder which is being treated or prevented is found in the paediatric population, and the product is not authorised in all paediatric age groups, the potential for off-label paediatric use in the non-authorised age groups should be discussed. If there are limited treatment options it should not be assumed that clinicians will adhere to the labelled indication so it is important that potential paediatric issues are discussed. Any actual use should be discussed in RMP module SV section "Non-study post-authorisation exposure" (see V.B.8.5.2.) and in RMP module SV section "Post-authorisation use in populations not studied in clinical trials" (see V.B.8.5.3.).

V.B.8.7. RMP module SVII "Identified and potential risks"

This RMP module provides information on the important identified and potential risks associated with use of the product. These should include only the important identified and potential adverse events/reactions, important identified and potential interactions with other medicinal products, foods and other substances, and the important pharmacological class effects.

Because of the need for different additional categories of risks to be considered with advanced therapy medicinal products, a different version of RMP module SVII is available for products classified as advanced medicinal products. Only one version (either sections V.B.8.7.1 - V.B.8.7.5 or sections V.B.8.8.1 – V.B.8.8.3) of RMP module SVII should be provided in a RMP.

V.B.8.7.1. RMP module SVII section "Newly identified safety concerns"

Safety concerns (important identified and important potential risks) identified since the last submission of the RMP should be listed here and further discussed in the appropriate section below. The source of the safety concern should be stated, whether it is an important identified or important potential risk and whether new studies or risk minimisation activities are proposed (with further details in the appropriate RMP parts).

V.B.8.7.2. RMP module SVII section "Recent study reports with implications for safety concerns"

Study reports (either interim or final, from whichever type of study), since the last RMP, which contain results which have a significant impact on an existing safety concern should be discussed here. The conclusions should be incorporated into the other sections of the safety specification as appropriate (e.g. RMP module SII; section V.B.8.7.3; V.B.8.7.4; V.B.8.7.5; RMP Module SVI and RMP Module SVIII

V.B.8.7.3. RMP module SVII section "Details of important identified and potential risks from clinical development and post-authorisation experience"

This RMP section should provide more information on the important identified and potential risks. This RMP section should be concise and should not be a data dump of tables or lists of adverse reactions from clinical trials, or the proposed or actual contents of section 4.8 of the summary of

product characteristics (SmPC).

What constitutes an important risk will depend upon several factors including the impact on the individual patient, the seriousness of the risk and the impact on public health (see also V.B.1). Normally, any risk which is clinically important and which is likely to be included in the contraindications or warnings and precautions section of the summary of product characteristics (SmPC) should be included here. In addition, risks, which, whilst not normally serious enough to require specific warnings or precautions but which occur in a significant proportion of the treated population, affect the quality of the treated person's life, and which could lead to serious consequences if untreated should also be considered for inclusion, e.g. severe nausea and vomiting with chemotherapy.

For some products, disposal of the used product may constitute a safety concern, e.g. transdermal patches where there may be significant amounts of active substance remaining in the patch when it is discarded. There may also be occasions where there is an environmental concern over product disposal because of known harmful effects on the environment, e.g. substances which are particularly hazardous to aquatic life which should not be disposed of in landfill sites.

Presentation of risk data:

When the information is available, detailed risk data should include the following:

- frequency;
- public health impact (severity and seriousness/reversibility/outcomes);
- impact on the individual patient (effect on quality of life);
- risk factors (including patient factors, dose, at risk period, additive or synergistic factors);
- preventability (i.e. predictability of a risk, whether risk factors have been identified, or possibility of detection at an early stage which could mitigate seriousness);
- potential mechanism;
- evidence source(s) and strength of the evidence.

The frequency of important identified risks should be expressed taking into account the source of the data. For a product already on the market, the reporting rate based on the number of spontaneously reported adverse events/adverse reactions (in the numerator) and the sales data (in the denominator) is very likely to underestimate the rate of occurrence of an adverse reaction in an exposed population and should be avoided. When an accurate frequency is needed for an important identified risk, this should always be based on systematic studies (e.g. clinical trials or epidemiological studies) in which both the number of patients exposed to the medicinal product and the number of patients who experienced the respective identified risk are known.

The denominator should be expressed using the appropriate measure: e.g. number of patients or in patient-time or equivalent units (courses of treatment, prescriptions, etc.) It should be stated clearly which frequency parameter is being used: e.g. incidence proportion (patient units in the denominator) or incidence rate (patient-time units in the denominator). Confidence intervals should be provided. When using patient-time, the underlying assumption is that the hazard function must be nearly constant over the follow-up time. Otherwise it should be split into relevant categories where the assumption of constancy holds. This may be particularly important if treatment duration

is a risk factor. Where appropriate, the period of major risk should be identified. Identified risk incidence rates should be presented for the whole population and for relevant population categories.

For important identified risks, the excess (relative incidence compared to a specified comparator group) should be given. Time to event data should be summarised using survival techniques. Cumulative hazard functions may also be used to represent the cumulative probability of occurrence of an adverse reaction in the presence of competing events.

For potential risks, the background incidence/prevalence in the target population(s) should be provided.

For most RMPs involving single products, risks which relate specifically to an indication or formulation can usually be handled as individual safety concerns, e.g. accidental intravenous administration could be a safety concern in a single product with both oral and subcutaneous forms.

For RMPs covering multiple products where there may be significant differences in the identified and potential risks for different products, it may be appropriate to categorise the risks to make it clearer which risks relate to which product. Headings which could be considered include:

- Risks relating to the active substance

  This would include important identified or potential risks which are common to all formulations, routes of administration and target populations. It is likely that most risks will fall into this category for the majority of products.

- Risks related to a specific formulation or route of administration

  Examples might include an RMP with two products: one a depot intramuscular formulation and the other an oral formulation. Additional concerns relating to accidental intravenous administration clearly would not be applicable to the oral product.

- Risks relating to a specific target population

  The paediatric population is an obvious example of a target population where there may be additional risks relating to physical, mental and sexual development which would not be relevant to a product intended solely for adult patients.

- Risks associated with switch to non-prescription status.

Division of identified and potential risks using headings should only be considered when the risks clearly do not apply to some products and lack of separation could cause confusion.

V.B.8.7.4. RMP module SVII section "Identified and potential interactions including food-drug, drug-drug interactions and drug-herbal interactions"

Identified and potential pharmacokinetic and pharmacodynamic interactions should be discussed in relation to both the treatments for the condition, but also in relation to commonly used medications in the target population. For each, the evidence supporting the interaction and possible mechanism should be summarised, and the potential health risks posed for the different indications and in the different populations should be discussed. Interactions which are important clinically should be included as a safety concern in RMP module SVIII "Summary of the safety concerns."

V.B.8.7.5. RMP module SVII section "Pharmacological class effects"

Important risks which have not been included in RMP module SVII "Details of important identified and potential risks from clinical development and post-authorisation experience" (above) but which are believed to be common to the pharmacological class should be discussed here. The discussion should include the mechanism, the impact (severity and duration), frequency seen with other members of the same or similar pharmacological class.

For risks which have been included in the RMP section SVII "*Details of important and identified and potential risks from clinical development and post-authorisation experience*" above, all that is required in this RMP section are the frequencies seen with the medicinal product compared with those seen with other products in the same or similar pharmacological class.

If there is evidence that a risk, which is common to other members of the pharmacological class, is not thought to be a safety concern with the concerned medicinal product, details, and the evidence supporting this, should be provided and discussed.

V.B.8.8. RMP module SVII "Identified and potential risks (ATMP version)"

Advanced therapy medicinal products (ATMPs) because of their nature may have specific risks that are usually not applicable to other non-advanced therapy medicinal products (use as a guide: EMA Guideline on Safety and Efficacy Follow-up – Risk Management of Advanced Therapy Medicinal Products). For this reason, for ATMPs, this ATMP specific version of RMP module replaces the standard RMP module SVII.

Although not all of the risks listed in section V.B.8.8.3. are unique to ATMPs or applicable to all ATMPs, they represent the most relevant ones which need to be considered.

V.B.8.8.1. RMP module SVII section "Newly identified safety concerns (ATMP)"

Safety concerns (important identified and important potential risks) identified since the last submission of the RMP should be listed here and further discussed in the appropriate section below. The source of the safety concern should be stated, whether it is an important identified or important potential risk and whether new studies or risk minimisation activities are proposed (with further details in the appropriate RMP parts).

V.B.8.8.2. RMP module SVII section "Recent study reports with implications for safety concerns (ATMP)"

Study reports (either interim or final), since the last RMP, which contain results which have a significant impact on an existing safety concern should be discussed here. The conclusions should be incorporated into the other sections of the safety specification as appropriate (e.g. RMP module SII; section V.B.8.8.3; RMP Module SVI and RMP Module SVII).I.

V.B.8.8.3. RMP module SVII section "Details of important identified and potential risks (ATMP)"

This section should provide more information on the most important identified and potential risks.

This section should be selective and should not be a data dump of tables or lists of adverse reactions from clinical trials, or the proposed or actual contents of section 4.8 of the summary of product characteristics (SmPC).

What constitutes an important risk will depend upon several factors including the impact on the individual, the seriousness of the risk and the impact on public health. Normally, any risk which is clinically important and is/is likely to be included in the warnings and precautions section of the summary of product characteristics should be included here. In addition, risks, which, whilst not normally serious enough to require specific warnings or precautions but which occur in a significant proportion of either the patient or donor, affect the quality of life, and which could lead to serious consequences if untreated should also be considered for inclusion. The additional risks specific to ATMPs which should be considered for discussion include:

- risks to living donors, for instance:
  - risks to living donors related to their conditioning prior to procurement (e.g. immunosuppression, cytotoxic agents, growth factors);
  - risks to living donors related to surgical/medical procedures used during or following procurement, irrespective of whether the tissue was collected or not;
- risks to patients related to quality characteristics of the product, in particular:
  - species of origin and characteristics of cells (and related body fluids, biomaterials, biomolecules) that are used during manufacturing, and the safety testing performed;
  - characteristics of vectors for gene therapy medicinal products;
  - biologically active substances used in manufacturing (e.g. enzymes, antibodies, cytokines, sera, growth factors, antibiotics);
  - quality assurance and characteristics of the finished product in terms of defined composition, stability, biological activity, and purity with reference to non-physiologic proteins and fragments thereof;
  - risk related to transmissible diseases (e.g. viral, bacterial, parasitical infections and infestations, but also malignant disease);
- risks to patients related to the storage and distribution of the product, for instance:
  - risks related to preservation, freezing and thawing;
  - risks of breaking the cold chain or other type of controlled temperature conditions;
  - risks related to stability of the product;
- risks to patients related to administration procedures, for instance:
  - biologically active substances used in preparation of the product prior to administration (e.g. enzymes, antibodies, cytokines, sera, growth factors, antibiotics);
  - risks related to conditioning of the patient;
  - risks of related medical or surgical procedures (e.g. anaesthesia, infusion, transfusion, implantation, transplantation or other application method);

  - risks related to clinical follow-up (e.g. immunosuppression as co-medication or as necessary for treatment of complications, diagnostic procedures, hospitalisation);
  - risks related to mistakes or violations of the standard procedures for administration of the product (e.g. different administration procedures used by different healthcare establishments/healthcare professionals resulting in differing results);
- risks related to interaction of the product and the patient, for instance:
  - unwanted immunogenicity and its consequences (including e.g. anaphylaxis, graft versus host disease, graft rejection, hypersensitivity reactions, immune deficiencies);
  - risks related to both intended and unintended genetic modification of the patient's cells (apoptosis, change of function, alteration of growth and/or differentiation, malignancy);
  - early and late consequences of homing, grafting, differentiation, migration and proliferation;
  - risks related to infection with vectors used in gene therapy medicinal products (type of vector, target cells, persistence, potential for latency and reactivation, potential for integration of genetic material into the host genome, prolonged expression of the transgene, altered expression of the host's genes);
- risks related to scaffolds, matrices and biomaterials (e.g. biodegradation, mechanical factors);
- risks related to persistence of the product in the patient, e.g.:
  - availability of rescue procedures or antidotes and their risks;
  - late complications, particularly malignancies and auto-immunity;
  - considerations on the potential impact of previous, concomitant, or future therapies typical for the diagnosis or treatment of the respective disease on the product, or vice versa impact of the product on those other therapies (e.g. an immunoglobulin treatment later in life could impact on expression of the introduced gene by antibody interaction);
- risks related to re-administration, for instance:
  - immune reactions - anaphylaxis, neutralising antibodies;
  - risks related to repeated surgical or administration procedures;
- risks to close contacts, for instance:
  - based on the environmental risk assessment, virus shedding and its consequences;
- specific parent-child risks, for instance:
  - risk of germ line integration of transgene, or other genetic transformation of the germ line;
  - foetal transmission (of e.g. vectors, biologically active substances, cells, infectious agents);
  - trans-mammary exposure of children in breast-feeding women (to e.g. vectors, biologically active substances, cells, infectious agents).

V.B.8.9. RMP module SVIII "Summary of the safety concerns"

At the end of the RMP part "safety specification" a summary should be provided of the safety

concerns.

A safety concern is:

- an important identified risk;
- an important potential risk; or
- missing information (see Annex I).

It is noted that the ICH definition of safety concern is: an important identified risk, important potential risk or important missing information, i.e. includes the qualifier "important" in relation to missing information (see Annex IV, ICH-E2C(R2) Guideline). The ICH-E2E Guideline (see Annex IV) uses the terms safety issue and safety concern interchangeably with the same definition for safety concern as defined in the ICH-E2C(R2) Guideline.

The change of the term in Arab Countries, to name this concept "missing information" rather than "important missing information", is to be clear that in the Arab Country concerned a marketing authorisation cannot be granted if there are unacceptable gaps in knowledge, a marketing authorisation shall be refused if the quality, safety or efficacy are not properly or sufficiently demonstrated.

For RMPs covering multiple products where there may be significant differences in the important identified and important potential risks for different products, similar to the presentation of risks in RMP module SVII, it may be appropriate to subdivide the summary of safety concerns under specific headings with the relevant identified and potential risks under each heading. Headings which could be considered include:

- safety concerns relating to the active substance;
- safety concerns related to a specific formulation or route of administration;
- safety concerns relating to the target population;
- risks associated with switch to non-prescription status.

Division of safety concerns by headings should only be considered when the risks clearly do not apply to some products and inclusion as a single list could cause confusion.

V.B.9. RMP Part III "Pharmacovigilance plan"

The purpose of the pharmacovigilance plan is to discuss how the applicant/marketing authorisation holder plans to identify and/or characterise the risks identified in the safety specification. It provides a structured plan for:

- the identification of new safety concerns;
- further characterisation of known safety concerns including elucidation of risk factors;
- the investigation of whether a potential safety concern is real or not;
- how missing information will be sought.

It does NOT include actions intended to reduce, prevent or mitigate risks

The pharmacovigilance plan should be based on the safety concerns summarised in RMP module

SVIII of the safety specification. Early discussions between medicines authority concerned and the marketing authorisation holder or applicant are recommended to identify whether, and which, additional pharmacovigilance activities are needed. It is important to note that only a proportion of risks are likely to be foreseeable and therefore signal detection, which is part of routine pharmacovigilance, will be an important element in identifying new risks for all products.

Pharmacovigilance activities can be divided into routine pharmacovigilance activities and additional pharmacovigilance activities. For each safety concern, the applicant/marketing authorisation holder should list their planned pharmacovigilance activities for that concern. Pharmacovigilance plans should be proportionate to the risks of the product. If routine pharmacovigilance is considered sufficient for post-authorisation safety monitoring, without the need for additional actions (e.g. safety studies) "routine pharmacovigilance" should be entered against the safety concern.

V.B.9.1. RMP part III section "Routine pharmacovigilance activities"

Routine pharmacovigilance is the set of activities required to fulfil the legal requirements for pharmacovigilance contained within the national pharmacovigilance directive and regulations of the Arab Country concerned. The Pharmacovigilance System Master File (see Module II) contains details of the system and processes each marketing authorisation applicant/holder has in place to achieve this. These details are not required to be submitted in the RMP.

In certain situations, the medicines authority in the Arab Country concerned may make recommendations for specific activities related to the collection, collation, assessment and reporting of spontaneous reports of adverse reactions which differ from the normal requirements for routine pharmacovigilance (see Module I). If these recommendations include recording of tests (including in a structured format) which would form part of normal clinical practice for a patient experiencing the adverse reaction then this requirement would still be considered as routine. The routine pharmacovigilance section of the pharmacovigilance plan should be used in these circumstances to explain how the applicant will modify its routine pharmacovigilance activities to fulfil any special medicines authority recommendations on routine pharmacovigilance.

However, if the recommendation includes the submission of tissue or blood samples to a specific laboratory (e.g. for antibody testing) which is outside "normal" clinical practice, then this would constitute an additional PhV activity.

<u>Specific adverse reaction follow-up questionnaires</u>

Where an applicant/marketing authorisation holder is requested, or plans to use, specific questionnaires to obtain structured information on reported adverse reactions of special interest, copies of these forms should be provided in RMP annex 7 and will be made available upon request. Applicants/marketing authorisation holders are encouraged to use the same or similar questionnaires for the same adverse event to decrease the burden on healthcare professionals.

Use of specific questionnaires as a follow-up to a reported suspected adverse reaction is considered to be routine pharmacovigilance.

V.B.9.2. RMP part III section "Additional pharmacovigilance activities"

Additional Pharmacovigilance activities may be non-clinical studies, clinical trials or non-interventional studies. A safety concern may have no, or a number of, additional pharmacovigilance activities associated with it depending upon its nature, the degree to which it has already been characterised, and the feasibility of studying it. Applicants/marketing authorisation holders should consider the situations when additional pharmacovigilance activities are needed. For example, a medicinal product intended for chronic use may only have relatively short term follow up data at the time of authorisation. Long term follow-up of patients from the clinical trial population or a cohort study may provide additional reassurance on the long term effects of the medicinal product. A medicinal product, where there is conflicting pre-clinical data, e.g. carcinogenicity in only one species, may also require long term follow-up of a cohort of patients to confirm that there is not an increased risk of cancer in human use. Another example, when additional pharmacovigilance activities should be considered, is when a potential risk with an individual medicinal product has a significant background incidence in the target population(s), leading to difficulties in distinguishing between the effects of the medicinal product and the "normal" incidence. When any doubt exists about the need for additional pharmacovigilance activities, consultation with the medicines authority concerned should be considered.

The objective(s) of additional pharmacovigilance activities will normally differ according to the safety concern to be addressed. For important identified and potential risks, objectives may be to measure the incidence rate in a larger or a different population, to measure the rate ratio or rate difference in comparison to a reference medicinal product, to examine how the risk varies with different doses and durations of exposure, to identify risk factors or to assess a causal association. For missing information, the objective may simply be to investigate the possibility of a risk or to provide reassurance about the absence of a risk.

The threshold for investigating a safety concern further will depend upon the indication, the target population, and the likely impact on public health. For example, a safety concern with a vaccine might have a lower threshold for investigation than the same issue in a medicinal product used in the palliative treatment of metastatic cancer.

Studies in the pharmacovigilance plan should relate to the safety concerns identified in the safety specification whether the studies are to identify and characterise risks, or to assess the effectiveness of risk minimisation activities. The applicant/marketing authorisation holder should include all studies designed to address the safety concern or measure the effectiveness of risk minimisation measures. This includes all post-authorisation safety studies which are initiated, managed or financed by marketing authorisation holders, voluntarily, or pursuant to obligations imposed by a the medicines authority concerned. Studies requested by other regulatory authorities (including those other than the Arab Countries) to investigate a specific safety concern should also be included. If a marketing authorisation applicant/holder has a marketing partner, studies designed to address a particular safety concern which are initiated, managed or financed by that partner should be included in the pharmacovigilance plan, if possible.

If, when reviewing a study protocol, a study is thought not to have as its primary focus one of the objectives of a PASS (as described in Module VIII), or a PAES, or the study is judged to be unlikely

to achieve its stated scientific purpose, the applicant/marketing authorisation holder will be required to modify it or remove it from the pharmacovigilance plan and resubmit the RMP.

Pharmacoepidemiology studies included in the pharmacovigilance plan should be designed and conducted according to the national respective legislation in place and recommendations in the internationally recognized guidelines [Guidelines for Good Pharmacoepidemiology Practices (GPP)[7] and the ENCePP Guide on Methodological Standards in Pharmacoepidemiology[8]. For studies involving children, refer to the EMA Guideline on Conduct of Pharmacovigilance for Medicines Used by the Paediatric Population[9]] which is acknowledged in the Arab Countries. It is highly recommended that expert advice is sought on the design and conduct of any studies – whether by the scientific advice procedure or by consulting known experts in the appropriate field. The responsibility for the scientific value of study protocols remains with applicants or marketing authorisation holders, even if they have been previously discussed with the medicines authorities concerned.

Further guidance on the conduct of post-authorisation safety studies (PASS) is given in Module VIII.

For some safety concerns, additional pharmacovigilance activities other than pharmacoepidemiology studies may be required, e.g. pharmacokinetic studies, clinical trials or further pre-clinical work. The appropriate guidelines and legislation should be followed in the conduct of these studies.

Protocols for studies in the pharmacovigilance plan should be provided in RMP annex 6 until completion of the study and submission to the medicines authorities concerned of the final study report. Changes to the protocol which do not affect milestones or due dates are not considered to be updates to the RMP (see also Module VIII).

For studies conducted as an obligation of any of the Arab countries, the marketing authorisation holder shall submit the study protocol in English (unless other language is requested by the medicines authority in the Arab Country concerned). For other studies, if the study protocol or the study report is written in another language, the marketing authorisation should facilitate access to study information by including an English translation of the title, the abstract of the study protocol and the abstract of the final study report (see Module VIII.)

Synopses of study reports from additional pharmacovigilance activities should be included in RMP annex 9. The impact of the new data on the risk-benefit balance of the medicinal product should be carefully assessed and the safety specification, pharmacovigilance plan and risk minimisation measures updated accordingly.

---

[7] International Society for Pharmacoepidemiology. Guidelines for good pharmacoepidemiology practices (GPP). Pharmacoepidemiol Drug Saf. 2005; 14 (8): 589-595; available on the ISPE website http://www.pharmacoepi.org/resources/guidelines_08027.cfm.

[8] ENCePP Guide on Methodological Standards in Pharmacoepidemiology"; available on http://www.encepp.eu

[9] EMEA/CHMP/PhVWP/235910/2005; available on http://www.ema.europa.eu/ema/index.jsp?curl=pages/regulation/document_listing/document_listing_000087.jsp&mid=WC0b01ac0580025b90&jsenabled=true

V.B.9.2.1. Particular situations with post authorisation safety studies

This section should be read in conjunction with Module VIII on post-authorisation safety studies.

a. Studies to measure the effectiveness of risk minimisation measures

Post-authorisation safety studies (PASS) include in their definition studies which measure the effectiveness of risk management measures. Studies looking at the effectiveness of risk minimisation measures should be included in the pharmacovigilance plan against the specific safety concern(s) as well as described in detail in the risk minimisation plan. Further guidance on measuring the effectiveness of risk minimisation measures can be found in Module XVI.

b. Drug utilisation studies

Drug utilisation studies are sometimes requested by national medicines authorities to monitor drug usage in their country, often in relation to reimbursement discussions. However, although they may not be initiated to collect safety data, they can provide useful information on whether risk minimisation activities are effective and on the demographics of target populations. Ideally, requests for drug utilisation studies by national medicines authorities in one or more Arab countries or any country worldwide should be included in the pharmacovigilance plan. However, these studies are sometimes requested post-authorisation by authorities not involved in medicinal product licensing. In these circumstances, the studies should be included in the next update to the RMP.

c. Joint studies

If safety concerns apply to more than one medicinal product, the national medicines authority of the Arab Country concerned shall s encourage the marketing authorisation holders concerned to conduct a joint PASS. The conduct of a joint study may also be appropriate where there are limited patients (rare diseases) or the adverse reaction is rare. The national medicines authority should facilitate the agreement of the concerned marketing authorisation holders in developing a single protocol for the study and conducting the study. Where the national medicines authority of the Arab Country concerned decides to impose the same PASS on more than one marketing authorisation holder and the concerned marketing authorisation holders have failed to agree a common protocol within a reasonable period of time, as determined by the national medicines authority; the national medicines authority, with input from the pharmacovigilance or relevant committee, may define either a common core protocol or key elements within a protocol which the concerned marketing authorisation holders will have to implement within a timescale laid down within the request. Hence, the study would become a condition of the marketing authorisation and be reflected in the RMP. In some circumstances, the encouragement to do joint studies may relate to a single active substance where there are multiple marketing authorisation holders for the same active substance.

d. Registries

A registry is an organised system that uses observational methods to collect uniform data on specified outcomes in a population defined by a particular disease, condition, or exposure. A registry can be used as a data source within which studies can be performed. Entry in a registry is generally defined either by diagnosis of a disease (disease registry) or prescription of a drug (exposure registry).

Registries should ideally include a comparator group so a disease registry will usually be more suitable than a registry confined to a specific product. However, if, an applicant/marketing authorisation holder institutes a registry as part of an agreed RMP, the protocol for the registry will allow all patients who are prescribed the active substance or who have the same disease, as appropriate, to be entered in the registry. Entry to the registry should not be conditional on being prescribed a product with a particular invented name or marketing authorisation holder unless there are clear scientific reasons for this. The same applies to similar biological products.

Unless there are over-riding public health or scientific concerns which lead to mandatory inclusion in a registry, refusal to enter a registry should not normally be a reason for refusing access to a medicine.

V.B.9.3. RMP part III section "Action plans for safety concerns with additional pharmacovigilance requirements"

For safety concerns with additional pharmacovigilance activities only, the action plan for each safety concern should be presented according to the following structure:

- safety concern;
- proposed action(s);
- individual objectives of proposed action(s) (i.e. what aspects of the safety concern they are intended to characterise); and

for each action:

- details of individual action;
  - steps; and
  - milestones (including expected dates).

As well as listing any additional pharmacovigilance activities under "proposed actions," protocols (draft or otherwise) for any formal studies should be provided in RMP annex 6. Marketing authorisation applicants/holders should also follow the requirements detailed in Module VIII, where appropriate. It is recommended that the internationally recognized ENCePP Guide on Methodological Standards in Pharmacoepidemiology[10] including the ENCePP Checklist for Study Protocols[11], should be referred to when considering epidemiological protocol design.

V.B.9.4. RMP part III section "Summary table of additional pharmacovigilance activities"

The pharmacovigilance plan describes pharmacovigilance activities designed to identify and characterise risks associated with the use of a medicinal product. Some may be imposed as conditions of the marketing authorisation (MA) either because they are key to the benefit-risk of the

[10] ENCePP Guide on Methodological Standards in Pharmacoepidemiology"; available on http://www.encepp.eu

[11] ENCePP Checklist for Study Protocols"; available on http://www.encepp.eu

product, or because they are specific obligations[12] in the context of a MA under exceptional circumstances[13]. If the obligation is a non-interventional PASS, it will be subject to the supervision as described in the national regulations of the Arab Country concerned.

The pharmacovigilance plan also includes studies that are conducted or financed by the marketing authorisation holder to address particular safety concerns. These studies may be on-going or planned, may have been requested by another regulatory authority or may have been suggested by the marketing authorisation applicant/holder and agreed with the medicines authority of the Arab Country concerned as forming part of the pharmacovigilance plan. They may also be conducted to evaluate the effectiveness of risk minimisation activities.

Finally, the Pharmacovigilance Plan also has a role in providing an overview of studies which, although not part of the formal agreed plan to identify and characterise specific safety concerns, the national medicines authority needs to be aware of. These studies are typically requested post-authorisation by a national medicines authority for reimbursement reasons e.g. drug utilisation studies.

The summary table of the pharmacovigilance plan should provide clarity to all of these studies taking into consideration the following:

- Clinical interventional studies are subject to the requirements of national regulations in the Arab Country concerned.
- Non-clinical interventional studies are subject to the legal and ethical requirements related to the protection of laboratory animals, and Good Laboratory Practice as appropriate.
- Agreed upon studies in the RMP between MAH and any Arab Medicine authority is a condition to maintain license of the product in the territory.

The following summary table should be used:

Description of Activity	**Milestones** *(may be several per activity)*	**Due Date** *(may be several per activity)*

[12] Specific obligations can only be imposed on marketing authorisations granted under exceptional circumstances (may be NOT applicable in some Arab Countries, check the national regulations)

[13] Exceptional circumstances is a type of marketing authorisation granted to medicines where the applicant is unable to provide comprehensive data on the efficacy and safety under normal conditions of use, because the condition to be treated is rare or because collection of full information is not possible or is unethical. (may be NOT applicable in some Arab Countries, check the national regulations)

V.B.10. RMP part IV "Plans for post-authorisation efficacy studies"

Efficacy, as assessed at the time of authorisation, is based on data from clinical trials which, by their nature, are of relatively limited duration (e.g. usually between 6 months to 3 years). The benefit (efficacy of the medicine) risk balance must be positive for a medicine to be authorised. Whereas it is recognised that many risks will be identified post authorisation, there is an implicit assumption that efficacy remains relatively constant over time. This may not always be valid.

For most medicines there will not be a need for post-authorisation efficacy studies. However, there may be circumstances where efficacy may vary over time and also patients in whom this assumption of constant efficacy may not be true and where longer term efficacy data post authorisation is necessary.

For paediatric medicinal products, and advanced therapy medicinal products, there may be potential need for long term follow-up of efficacy as part of post-authorisation surveillance for certain medicinal products namely:

- applications for a marketing authorisation that include a paediatric indication;
- applications to add a paediatric indication to an existing marketing authorisation;
- application for a paediatric use marketing authorisation;
- advanced therapy medicinal products.

In addition, the medicines authority of the Arab Country concerned may require post-authorisation efficacy studies for products where there are concerns about efficacy which can only be resolved after the product has been marketed, or when knowledge about the disease or the clinical methodology used to investigate efficacy indicate that previous efficacy evaluations may need significant revision. Although the guidelines refer to the studies as post-authorisation efficacy studies, the fact that these efficacy issues can only be resolved post-authorisation implies that this term includes effectiveness studies.

The requirement for efficacy studies post authorisation refers solely to the current indication(s) and not to studies investigating additional indications.

V.B.10.1. RMP part IV section "Summary of existing efficacy data"

As background to any proposed post-authorisation efficacy studies, and to provide context for the summary of the RMP, there should be a summary of the efficacy of the product and the studies and endpoints on which it was based. Where the RMP covers more than one medicinal product, the information should be provided by medicinal product to permit easy extraction for the summary of the RMP module. Similarly medicinal products with more than one indication should have a separate summary of efficacy for each indication.

For the summary of efficacy (one page maximum per indication/population) the following should be considered for inclusion:

- current (gold) standards of treatment;
- where the medicinal product fits in the therapeutic armamentarium (i.e. 1st line,

relapse, etc.);

- a brief statement of the standard against which the medicine was judged;
- number of patients in pivotal studies and treatment regimes;
- results.

The following areas should be discussed briefly and the need for further studies post authorisation evaluated:

- the robustness of the endpoints on which the efficacy evaluation is based;
- applicability of the efficacy data to all patients in the target population;
- factors which might affect the efficacy of the product in everyday medical practice;
- variability in benefits of treatment for sub populations.

For updates to the RMP, any subsequent data which impacts on efficacy should be mentioned and its impact on the benefits of the medicinal product discussed.

V.B.10.2 Tables of post-authorisation efficacy studies

A summary table showing an overview of the planned studies together with timelines and milestones should be provided here with the (draft) protocols for these studies included in RMP annex 8.

Efficacy studies which are specific obligations[12] and/or conditions of the marketing authorisation should also be included in this part of the RMP.

Efficacy studies which are specific obligations and/or conditions of the MA:

Description of Study	**Milestones** *(may be several Per activity)*	**Due Date** *(may be several Per activity)*

Other efficacy/effectiveness studies:

Description of Study	**Milestones** *(may be several Per activity)*	**Due Date** *(may be several Per activity)*

V.B.11. RMP Part V "Risk minimisation measures"

On the basis of the safety specification, a marketing authorisation applicant/holder should assess what risk minimisation activities are needed for each safety concern. The risk minimisation plan should provide details of the risk minimisation measures which will be taken to reduce the risks associated with individual safety concerns. It is not possible to provide precise guidance on which risk minimisation activity should be used in a given situation as each safety concern needs to be considered on a case-by-case basis and will depend upon the severity of the risk, the healthcare setting, the indication, the pharmaceutical form and the target population. A safety concern may be addressed using more than one risk minimisation measure.

For active substances where there are individual products with substantially different indications or target populations, it may be appropriate to have a risk minimisation plan specific to each product. Examples when multiple risk minimisation plans could be considered include:

- an active substance where there are products with both prescription only and non-prescription legal status;
- medicinal products where there are major risks, and the indications cross areas of medical expertise. In the latter case, there could be diverse educational needs for different specialists since the areas of specialised knowledge will be distinct. For example an active substance which causes important QT prolongation would most likely not need educational material explaining the implications of this and the interactions with other products if the product were intended solely for use by cardiologists in a hospital setting but might need educational material if intended for use in general practice or orthopaedic surgery where it is unlikely that prescribers will have this specialist knowledge;
- active substances where there are major risks which differ according to the target population.

Risk minimisation activities may consist of routine risk minimisation (e.g. measures associated with locally authorised product labelling) or additional risk minimisation activities (e.g. Direct Healthcare Professional Communications/educational materials/controlled distribution systems). All risk minimisation measures should have a clearly identifiable objective.

All risk minimisation measures should be reviewed at regular intervals and their effectiveness assessed (see V.B.11.4).

Additional risk minimisation measures and the assessment of the effectiveness of risk minimisation measures in general is discussed in more detail in Module XVI.

V.B.11.1. RMP part V section "Routine risk minimisation"

Routine risk minimisation activities are those which apply to every medicinal product. These relate to:

- the summary of product characteristics;
- the labelling;
- the package leaflet;

- the pack size(s);
- the legal status of the product.

The summary of product characteristics (SmPC) and the package leaflet are important tools for risk minimisation as they constitute a controlled and standardised format for informing healthcare practitioners and patients about the medicinal product, refer to the national guideline for "Summary of Product Characteristics and package leaflet" in the concerned Arab County to know how information should be presented, in addition, the EMA Guideline on Summary of Product Characteristics[14] may provide good guidance for that purpose. As discussed in V.B.8.6.4., the design of the packaging, and even the formulation itself, may play an important role in preventing medication error.

a. Pack size

Since every pack size is specifically authorised for a medicinal product, planning the number of "dosage units" within each pack, and the range of pack sizes available can be considered a form of routine risk management activity. In theory, controlling the number of "dosage units" should mean that patients will need to see a healthcare professional at defined intervals: increasing the opportunity for testing and reducing the length of time a patient is without review. In extreme cases, making units available in only one pack size to try to link prescribing to the need for review may be considered.

A small pack size can also be useful, especially if overdose is thought to be a major risk or if the potential for drugs to get into the general population needs to be controlled.

b. Legal status

Controlling the conditions under which a medicinal product may be made available can reduce the risks associated with its use or misuse. This can be achieved by controlling the conditions under which a medicinal product may be prescribed, or the conditions under which a patient may receive a medicinal product.

When a marketing authorisation is granted, it must include details of any conditions or restrictions imposed on the supply or the use of the medicinal product, including the conditions under which a medicinal product may be made available to patients. The conditions under which a medicinal product is made available is commonly referred to as the "legal status" of a medicinal product. Typically it includes information on whether or not the medicinal product is subject to medicinal prescription. It may also restrict where the medicinal product can be administered (e.g. in a hospital, but see below) or by whom it may be prescribed (e.g. specialist).

For medicinal products only available on prescription, additional conditions may be imposed by classifying medicinal products into those available only upon either a restricted medical prescription or a special medical prescription.

<u>Restricted medical prescription</u>

This may be used to control who may initiate treatment, prescribe the medicinal product and the

[14] http://ec.europa.eu/health/files/eudralex/vol-2/c/smpc_guideline_rev2_en.pdf

setting in which the medicine can be given or used. When considering classification of a medicinal product as subject to restricted medical prescription, the following factors shall be taken into account:

- the medicinal product, because of its pharmaceutical characteristics or novelty or in the interests of public health, is reserved for treatments which can only be followed in a hospital environment;
- the medicinal product is used for the treatment of conditions which must be diagnosed in a hospital environment or in institutions with adequate diagnostic facilities, although administration and follow up may be carried out elsewhere; or
- the medicinal product is intended for outpatients but its use may produce very serious adverse reactions requiring prescription drawn up as required by a specialist and special supervision throughout the treatment.

Although the use of legal status is not an activity that can be used directly by a marketing authorisation applicant for the purposes of risk reduction, the marketing authorisation applicant could request the medicines authority to consider a particular legal status and this is indicated in the SmPC.

However, the definition of what constitutes a specialist is not uniform throughout the Arab Countries so, in practice, the term "specialist" is sometimes phrased in section 4.2 of the summary of product characteristics (SmPC) as: "treatment by a physician experienced in the treatment of <the disease>". Although restricting to use in a hospital environment may in practice ensure that the medicinal product is always prescribed by a specialist, this needs to be balanced against the inconvenience to patients if they need to attend a hospital for every prescription. Care also needs to be taken when considering where a medicinal product can be safely administered. For example the term "clinic" has different connotations depending upon the country. For this reason, the type of equipment needed should be specified rather than a location: e.g. "use in a setting where resuscitation equipment is available."

Special medical prescription

For classification as subject to special medical prescription, the following factors shall be taken into account:

- the medicinal product contains, in a non-exempt quantity, a substance classified as a narcotic or a psychotropic substance within the meaning of the international conventions in force, such as the United Nations Conventions of 1961 and 1971; or
- the medicinal product is likely, if incorrectly used, to present a substantial risk of medicinal abuse, to lead to addiction or be misused for illegal purposes; or
- the medicinal product contains a substance which, by reason of its novelty or properties, could be considered as belonging to the group envisaged in the previous indent as a precautionary measure.

Categorisation at Arab Country level

There is the possibility of implementing further sub-categories at Arab Country level which permits each Arab Country to tailor the broad classifications described above to their national situation. The definitions and therefore also the implementation varies in those Countries where the sub-categories

exist.

The majority of safety concerns may be adequately addressed by routine risk minimisation activities. However, for some risks, routine risk minimisation activities will not be sufficient and additional risk minimisation activities will be necessary.

V.B.11.2. RMP part V section "Additional risk minimisation activities"

Additional risk minimisation activities are those risk minimisation measures which are not the routine risk minimisation activities listed above. Additional risk minimisation activities should only be suggested when essential for the safe and effective use of the medicinal product and these should be science based, and developed and provided by suitably qualified people. If additional risk minimisation activities are proposed, these should be detailed and a justification of why they are needed provided.

Many additional risk minimisation tools are based on communication which aims to augment the information in the summary of product characteristics (SmPC) and the package leaflet. Any communication material should be clearly focused on the risk minimisation goals, and should not be confused or combined with promotional material for marketing campaigns. Further description and guidance on the use of additional risk minimisation activities is provided in Module XVI.

It is essential that appropriate specialists/ experts are involved when developing risk minimisation activities. Marketing authorisation applicants/ holders are also encouraged to discuss risk minimisation plans with the medicines authorities as early as is feasible when it is likely that specific risk minimisation activities will need to be adapted to the different health care systems in place in the different countries, for that purpose, for the multinational MAA/MAH; a country specific addendum/ display to the RMP are required (unless otherwise specified by the medicines authority of the Arab Country concerned). For very complex risk minimisation measures, it may be appropriate to contact medicines authorities, in the countries where it is planned to market the product, either prior to submitting risk minimisation proposals or during the course of the evaluation procedure. Where possible and appropriate, proposed risk minimisation activities should be discussed with patients and healthcare professionals if it is likely that risk minimisation activities will be directed towards them.

The medicines authority of the Arab County concerned reviews RMPs and makes recommendations on their content and on the suitability of proposed pharmacovigilance activities and risk minimisation measures. Only additional risk minimisation measures **which are agreed** by the medicines authority of the Arab County concerned will be allowed in the risk minimisation plan and any other activities considered as not essential for the safe and effective use of the product will need to be removed and an updated RMP submitted before the medicines authority Opinion. Additional risk minimisation activities will become then, conditions of the marketing authorisation and the key elements should be detailed in suitable annex of the medicines authority opinion as appropriate. Where appropriate, full details of additional risk minimisation activities (including mock ups) should be provided in RMP annexes 10 and 11.

<u>Educational material</u>

Any educational material should be non-promotional. It is recommended that communication

experts, patients and healthcare professionals are consulted on the design and wording of educational material and that, where appropriate, it is piloted before releasing for use.

The medicines authority of the Arab County concerned will agree the key elements of what should be included in the educational material and these key elements will become, once agreed by the medicines authority, a condition of the marketing authorisation. In addition, the final version of the educational material will need to be approved by the national medicines authority to check that the material contains the key elements in an appropriate design and format and is not promotional.

For public health reasons, applicants/marketing authorisation holders for the same active substance may be required by the medicines authority to have educational material with as similar as possible layout, content, colour and format to avoid patient confusion. This requirement may also be extended to other patient material such as patient alert cards and patient monitoring cards. For this reason, marketing authorisation applicants/holder are strongly recommended to avoid the use of company logos or other trademarked or patented material in educational material.

Further extensive guidance on additional risk minimisation measures is provided in Module XVI.

V.B.11.3. Format of risk minimisation plan(s)

Each safety concern identified in the summary of the safety specification should be addressed. If no risk minimisation activity is proposed then “none proposed” should be entered against the objective.

For each safety concern, the following information should be provided:

- objectives of the risk minimisation activities;
- routine risk minimisation activities;
- additional risk minimisation activities (if any), individual objectives and justification of why needed;
- how the effectiveness of each (or all) risk minimisation activities will be evaluated in terms of attainment of their stated objectives;
- what the target is for risk minimisation, i.e. what are the criteria for judging success;
- milestones for evaluation and reporting.

For routine risk minimisation activities, the proposed text in the summary of product characteristics (SmPC), or a précis, should be provided along with details of any other routine risk minimisation activities proposed for that safety concern. Especially for multinational MAA/MAH, if the medicinal product has two or more SmPC text (i.e. in different countries), it may be appropriate to comment on the differences in the text between countries or in the country specific addendum/display of the RMP.

V.B.11.4. RMP part V section “Evaluation of the effectiveness of risk minimisation activities”

Risk minimisation measures are public health interventions intended to prevent or reduce the probability of the occurrence of adverse reactions associated with exposure to a medicinal product, or to reduce their severity/impact on the patient should the adverse reactions occur. The terms "risk

minimisation measures and risk minimisation activities are used virtually synonymously in GVP. The success of risk minimisation activities in delivering these objectives needs to be evaluated throughout the lifecycle of a product to ensure that the burden of adverse reactions is minimised and hence the overall risk-benefit balance is optimised.

When the RMP is updated, the risk minimisation plan should include an evaluation of the impact of routine and/or additional risk minimisation activities as applicable. Such information may be presented by region, if applicable/relevant. Results of any studies to assess the impact or other formal assessment(s) of risk minimisation activities should be included when available. As part of this critical evaluation, the marketing authorisation holder should make observations on factors contributing to the success or weakness of risk minimisation activities. If a particular risk minimisation strategy proves ineffective, or to be causing an excessive or undue burden on patients or the healthcare system then alternative activities need to be put in place. The marketing authorisation holder should always comment on whether additional or different risk minimisation activities are needed for each safety concern.

In certain cases it may be judged that risk minimisation cannot control the risks to the extent possible to ensure a positive risk-benefit balance and that the medicinal product needs to be withdrawn either from the market or restricted to those patients in whom the benefits outweigh the risks.

More extensive guidance on monitoring the effectiveness of risk minimisation activities is included in Module XVI.

V.B.11.5. RMP part V section "Summary of risk minimisation measures"

A table summarising the routine and additional risk minimisation activities by safety concern should be provided.

V.B.12. RMP part VI "Summary of activities in the risk management plan by medicinal product"

This part is intended to provide summary of the RMP **for each medicinal product** included in the RMP (i.e. in the RMP provide a separate RMP part VI for each medicinal product included in the RMP). The summary must include key elements of the RMP with a specific focus on risk minimisation activities. With regard to the safety specification of the medicinal product concerned, it should contain important information on potential and identified risks as well as missing information.

There may be a need for a summary of the RMP to be provided for different purposes in varying formats

A scientific summary of the RMP will be known as "the summary of the RMP" and is described in sections V.B.12.1 – V.B.12.6.

The Summary of the RMP shall be written by the MAA/MAH and will be evaluated during the assessment of the RMP.

Summary **tables** of the RMP showing the safety concerns, the pharmacovigilance plan, plans for

post-authorisation efficacy and risk minimisation measures will be included in this section.

There may also be a requirement for additional summaries of the RMP to be provided for inclusion in these documents; this will be announced by each national medicines authority.

V.B.12.1. RMP part VI section "format and content of the summary of the RMP"

In situations where the RMP covers more than one product, a separate RMP part VI should be prepared for each product. To present a balanced picture, the risks discussed in the RMP should be put into context with a very concise and focused description of the benefits of the medicinal product.

The summary of the RMP part VI should contain the following information based on RMP part II module SVIII and RMP parts III, IV and V:

- Summary of safety concerns:
  - Important identified risks,
  - Important potential risks,
  - Missing information,
- Summary of risk minimisation activities by safety concern;
- Planned post authorisation development plan;
- Studies which are a condition of the marketing authorisation (see sections V.B.9.4 and V.B.10.2)
- Major Changes to the Risk Management Plan over time.

The information provided in each section should be brief and focused and in accordance with the RMP templates.

V.B.12.2. RMP part VI section "Summary of safety concerns"

This section should briefly describe the safety concerns. Copy table from Part II: SVIII

Summary of safety concerns	
Important identified risks	<> List
Important potential risks	<> List
Missing information	<> List

In addition to the listing of the safety concerns in the above table; each safety concern should be briefly described using the following tables.

For important identified risks include the frequency and severity of the safety concern for the important identified risks and their preventability.

Risk	**What is known**	**Preventability**
Risk 1		
Risk 2 etc.		

For important potential risks the reasons why it is thought to be a potential risk (e.g. toxicology in animal study, known effect in other members of the pharmaceutical class) should be explained together with the uncertainties, e.g. "occurs in other medicinal products in the same class but was not seen in the clinical trials for this medicinal product which studied 3,761 people".

Risk	What is known
Risk 1	
Risk 2 etc.	

For missing information it should be stated that there is no, or insufficient, information regarding the safety concern, the possible relevance to the target population should be highlighted as well as the associated recommendations, e.g. contraindication, use with caution.

Risk	What is known
Risk 1	
Risk 2 etc.	

V.B.12.3. RMP part VI section "Summary of risk minimisation measures by safety concern"

Copy table V.3 from Part V

Safety concern	Routine risk minimisation measures	Additional risk minimisation measures

Where there are safety concerns specific to a particular indication or population, or where an ATMP is involved it may be appropriate to structure the risks by the headings suggested in module SVII

V.B.12.4. RMP part VI section "Planned post-authorisation development plan"

Data should be presented in the form of a table showing the ongoing and planned activities in terms of efficacy studies and the further investigation of safety concerns. **This table would combine the data from sections V.B.9.4. and V.B.10.2.** (i.e. From combined summary tables in Part III.5.1 and Part IV.3 of the RMP template).

Each row of the table should include the name of the study, objectives for the study, the safety concern or efficacy issue being addressed, the status and planned date for submission of the results.

List of studies in post authorisation development plan

Study/activity (including study number)	Objectives	Safety concerns/ efficacy issue addressed	Status	Planned date for submission of (interim and) final results

Studies which are a condition of the marketing authorisation

Statement on which studies in the above table are conditions of the MA e.g. "None of the above studies is a condition of the marketing authorisation."

V.B.12.5. RMP part VI section "Summary of changes to the risk management plan over time"

This table should provide a listing of all significant changes to the RMP in chronological order. This should include, for example, the date and version number of the RMP when new safety concerns were added or existing ones removed or changed, dates and version of the RMP when new studies were added or finished, and a brief summary of changes to risk minimisation activities and the associated dates these changes were agreed. Since changes to risk minimisation activities may involve a variation, the date used for changes to risk minimisation activities should be that of the decision by a national medicines authority. The date for safety concerns and studies should be the date of the RMP in which they are first added.

V.B.13. RMP part VII "Annexes to the risk management"

The RMP should contain the annexes listed below. Annexes 1-3, 10 and 11 should be provided **for each medicinal product within the RMP**. If no information is available for a given annex this should be stated. If a single study is addressing issues in both parts III and IV of the RMP, it should be included in RMP annex 6 with a cross reference in RMP annex 8.

RMP annex 1: Interface between RMP and "National Pharmacovigilance and Safety reports database"/"National Pharmacovigilance Issues Tracking Tool" (electronic only), applicable only in some Arab Countries hence this annex should be submitted only upon request from the medicines authority of the Arab Countries concerned. Further details will be announced by authorities who require such annex.
In Arab Countries who do not require this annex, it should be omitted (**WITHOUT** changing the numbering of the following annexes).

RMP annex 2: Current (or proposed if product is not authorised) local summary of product characteristics (SmPC) and package leaflet. If multiple versions are included, they should show in which Country(s) they are applicable. If available, a core SmPC should be provided with an overview of the changes applicable to the SmPC in each Arab Country or at least in the Arab Country concerned.

RMP annex 3: worldwide marketing authorisation status by country (including Arab Country(s) concerned). This should include:

- **current** licence status (approved/refused/ under review/ suspended/expired/withdrawn);
- date(s) of approval/refusal/suspension/expiration/withdrawal;
- current marketing status (marketed/ not marketed);
- date(s) marketed/withdrawn from market;

- trade name(s);
- any explanatory comments.

RMP annex 4: Synopsis of on-going and completed clinical trial programme.

RMP annex 5: Synopsis of on-going and completed pharmacoepidemiological study programme.

RMP annex 6: Protocols for proposed and on-going studies in the section "Summary table of additional pharmacovigilance activities" in RMP part III.

RMP annex 7: Specific adverse event follow-up forms.

RMP annex 8: Protocols for proposed and on-going studies in RMP part IV.

RMP annex 9: Synopsis of newly available study reports for RMP parts III-IV.

RMP annex 10: Details of proposed additional risk minimisation activities (if applicable).

RMP annex 11: Mock up examples in English (unless other language is requested by the medicines authority of the Arab Country concerned) of the material provided to healthcare professionals and patients. For those materials directed to patients, in addition to the English version, Arabic translation of the mock up shall be included as well.

RMP annex 12: Other supporting data (including referenced material).

V.B.14. The relationship between the risk management plan and the periodic safety update report

The primary post-authorisation pharmacovigilance documents will be the RMP and the periodic safety update report (PSUR). Although there is some overlap between the documents, the main objectives of the two are different and the situations when they are required are not always the same. Regarding objectives, the main purpose of the PSUR is integrated, post-authorisation risk benefit assessment whilst that of the RMP is pre-and post-authorisation risk-benefit management and planning. As such the two documents are complementary. Regarding submission, whereas for many medicinal products, both documents will need to be submitted, for other medicinal products only one will be required depending upon where the product is in its lifecycle. For this reason both documents need to be "stand-alone" but it is anticipated that certain modules may be common to prevent duplication of effort.

The PSUR examines the overall safety profile as part of an integrated benefit-risk evaluation of the medicinal product at set time periods and as such will consider the overall risk-benefit balance of the medicinal product (and a much wider range of (suspected) adverse reactions). It is anticipated that only a small proportion of these would be classified as important identified or important potential risks and become a safety concern discussed within the RMP. Deciding to add an adverse reaction to section 4.8 of the summary of product characteristics (SmPC) is not a sufficient cause per se to include it as a safety concern in the RMP (see V.B.8.7.2.).

When a PSUR and a RMP are to be submitted together, the RMP should reflect the conclusions of the accompanying PSUR. For example if a new signal is discussed in the PSUR and the PSUR concludes that this is an important identified or important potential risk, this risk should be included

as a safety concern in the updated RMP submitted with the PSUR. The pharmacovigilance plan and the risk minimisation plan should be updated to reflect the marketing authorisation holder's proposals to further investigate the safety concern and minimise the risk.

V.B.14.1. Common modules between periodic safety update report and risk management plan

The proposed PSUR and RMP modular format is intended to minimise duplication by enabling common (sections of) modules to be utilised interchangeably across both reports. Common (sections of) modules are identified in the following table.

Table V.3: Common sections between RMP and PSUR (may not be in identical format)

RMP section	PSUR section
Part II, module SV – "Post-authorisation experience", section "Regulatory and marketing authorisation holder action for safety reason"	Section 3 – "Actions taken in the reporting interval for safety reasons"
Part II, module SV – "Post-authorisation experience", section "Non-study post-authorisation exposure"	Sub-section 5.2 – "Cumulative and interval patient exposure from marketing experience"
Part II, Module SVII – "Identified and potential risks"	Sub-section 16.4 – "Characterisation of risks"
Part II, module SVIII – "Summary of the safety concerns" (as included in the version of the RMP which was current at the beginning of the PSUR reporting interval)	Sub-section 16.1 – "Summary of safety concerns"
Part V – "Risk minimisation measures", section "Evaluation of the effectiveness of risk minimisation activities"	Sub-section 16.5 – "Effectiveness of risk minimisation (if applicable)"

V.B.15. Principles for assessment of risk management plans

The principle points which need to be considered when preparing or reviewing a risk management plan for a medicinal product are:

a. Safety specification

- Have all appropriate parts of the safety specification been included?
- Have all appropriate data been reviewed when compiling the safety specification, i.e. are there important (outstanding) issues from other sections of the dossier which have not been discussed in the safety specification?
- If parts of the target population have not been studied, have appropriate safety concerns in relation to potential risks and missing information been included?
- What are the limitations of the safety database and what reassurance does it provide regarding the

safety profile of the medicinal product?

- Are there specific risks in addition to those addressed under ICH-E2E, e.g. off-label use, misuse and abuse, transmission of infectious disease, medication error, etc?
- Does the safety specification provide a true reflection of the safety concerns (i.e. important identified risks, important potential risks and missing information) with the product?
- If a generic application, have all safety concerns from the reference medicinal product been included in the safety specification?
- Does its place in the therapeutic armamentarium as described concur with the intended indication and current medical practice?

b. Pharmacovigilance plan

- Are all safety concerns from the safety specification covered in the pharmacovigilance plan?
- Are routine pharmacovigilance activities adequate or are additional pharmacovigilance activities necessary?
- Are the activities in the pharmacovigilance plan clearly defined and described and suitable for identifying or characterising risks or providing missing information?
- Are the safety studies which have been imposed by a medicines authority of the Arab country concerned as conditions clearly identified?
- If medication error is a safety concern, does the RMP include appropriate proposals to monitor these?
- Are the proposed additional studies necessary and/or useful?
- When draft protocols are provided, are the proposed studies in the pharmacovigilance plan adequate to address the scientific questions and are the studies feasible?
- Are appropriate timelines and milestones defined for the proposed actions, the submission of their results and the updating of the pharmacovigilance plan?

c. Plans for post-authorisation studies on efficacy

- Does the description of the efficacy of the product and what studies and endpoints it was based on conform with the contents of the dossier?
- Do all proposed studies have a valid scientific question as their primary aim and are any designed to increase use of the product)?

d. Risk minimisation measures

- Does the product information adequately reflect all important identified risks and missing information?
- Are any potential risks sufficiently relevant to the safe and effective use of the product that information about them should be included in the product information?
- Is the proposed wording about the risks and location in the product information appropriate and in line with relevant guidelines (e.g. SmPC guideline)?

- Has the marketing authorisation holder considered ways to reduce medication errors?
- Has this been translated into appropriate product information (including device design where appropriate) and pack design?
- Are proposed risk minimisation activities appropriate and adequate?
- Have additional risk minimisation activities been suggested and if so, are they risk proportionate and adequately justified?
- Are the methodologies for measuring and assessing the effectiveness of risk minimisation activities well described and appropriate?
- Have criteria for evaluating the success of additional risk minimisation activities been defined a priori?

e. Summary of the Risk Management Plan

- Is it a true representation of the RMP?
- Have the facts been presented appropriately
- Have all required formats been provided?

f. When an update is being assessed

- Have new data been incorporated into the safety specification?
- Have appropriate changes been made to the pharmacovigilance plan (if necessary in the light of new data)?
- Is there an evaluation of the effectiveness of risk minimisation measures?
- Have appropriate changes to risk minimisation measures been proposed if necessary?
- Does the new data suggest that a formal evaluation of the risk-benefit balance (if not already done in a PSUR) is needed?

V.B.16. Quality systems and record management

Although many experts may be involved in writing the RMP, the final responsibility for its quality, accuracy and scientific integrity lies with the marketing authorisation applicant/holder. As such the qualified person responsible for pharmacovigilance (QPPV) should be aware of, and have sufficient authority over the content. The marketing authorisation holder is responsible for updating the RMP when new information becomes available and should apply the quality principles detailed in Module I. The marketing authorisation holder should maintain records of when RMPs were submitted to national medicines authorities and the significant changes between each version of the RMP. These records, the RMPs and any documents relating to information within the RMP may be subject to audit and inspection by appropriately qualified pharmacovigilance inspectors.

V.C. Operation of risk management in Arab Countries

Risk management has historically focused upon the risk reduction approach and based solely on

managing risks. However, when considering how to maximise, or indeed assess, the risk-benefit balance, risks need to be understood in the context of benefit.

V.C.1. Legal basis for the implementation of risk management within the Arab Countries

Each Arab Country should have –as appropriate- its national regulations for requirements in relation to pharmacovigilance and in particular risk management.

V.C.2. Risk management in the Arab Countries

As stated above, the overall aim of risk management is to ensure that the benefits of a particular medicinal product (or a series of medicinal products) exceed the risks by the greatest achievable margin for the individual patient and for the target population as a whole. Therefore, although the legal provisions primarily relate to risks, public health will be better served by looking at both benefits and risks. National regulations in each Arab Country include provisions for post-authorisation efficacy studies, in addition to post-authorisation safety studies, to be a condition of the marketing authorisation in certain circumstances.

The requirements above are linked to medicinal products. However, to prevent duplication of planning and resource utilisation, there is a possibility for risk management plans to be substance specific. For an individual marketing authorisation holder and applicant, all products containing the same active substance should be included in one RMP unless separate presentations are requested by the medicines authority of the Arab County concerned or agreed by the same at the request of the applicant/marketing authorisation holder.

V.C.3. Situations when a risk management plan should be submitted

A RMP or an update, as applicable, may need to be submitted at any time during a product's life-cycle, i.e. during both the pre- and post-authorisation phases.

For all new marketing applications: the risk management plan describing the risk management system which the applicant will introduce for the medicinal product concerned shall be submitted, together with a summary thereof.

Situations, in addition, where a RMP or RMP update will normally be expected include:

- with an application involving a significant change to an existing marketing authorisation:
  - new dosage form;
  - new route of administration;
  - new manufacturing process of a biotechnologically-derived product;
  - paediatric indication;
  - other significant change in indication;

    A significant change in indication is a change of authorised indication(s) of a medicinal

product where the new treatment target population differs materially from the one for which the medicinal product was previously authorised. This includes (but is not limited to): a new disease area, a new age group (e.g. paediatric indication) or a move from severe disease to a less severely affected population. It may also include a move from 2nd line or other therapy or for an oncology product a change to the concomitant medication specified in the indication.

- at the request of the national medicines authority when there is a concern about a risk affecting the risk-benefit balance;
- with a submission of final study results impacting the RMP;
- with a PSUR for medicinal product, when the changes to the RMP are a direct result of data presented in the PSUR.
- at the time of the renewal of the marketing authorisation if the product has an existing risk management plan.

The need for a RMP or an update to the RMP should be discussed with the national medicines authority, as appropriate, well in advance of the submission of an application involving a significant change to an existing marketing authorisation.

An updated RMP should always be submitted if there is a significant change to the benefit-risk balance of one or more medicinal products included in the RMP.

V.C.3.1. Requirements in specific situations

Normally all parts of an RMP should be submitted. However, in certain circumstances as detailed below, in line with the concept of proportionality, certain parts or modules may be omitted (see Figure V.3) unless otherwise requested by the medicines authority of the Arab Country concerned. However, any safety concerns identified in a reference medicinal product in a module which is omitted from the risk management plan of a generic should be included in RMP module SVIII unless clearly no longer relevant.

Please note that the naming and numbering of the RMP parts, modules & sections are standardized thus should NOT be changed or renumbered due to the omission of un-required sections.

a. New applications involving generic[15] medicinal products

For new applications of generic medicinal product, RMP modules SI to SVII may be omitted. RMP module SVIII should be based on the safety concerns of the reference medicinal product unless the generic differs significantly in properties which could relate to safety, or unless requested otherwise by the national medicines authority. Provided the reference medicinal product does not have any

[15] 'Generic medicinal product': shall mean a medicinal product which has the same qualitative and quantitative composition in active substances and the same pharmaceutical form as the reference medicinal product, and whose bioequivalence with the reference medicinal product has been demonstrated by appropriate bioavailability studies. The different salts, esters, ethers, isomers, mixtures of isomers, complexes or derivatives of an active substance shall be considered to be the same active substance, unless they differ significantly in properties with regard to safety and/or efficacy. In such cases, additional information providing proof of the safety and/or efficacy of the various salts, esters or derivatives of an authorised active substance must be supplied by the applicant. The various immediate-release oral pharmaceutical forms shall be considered to be one and the same pharmaceutical form.

additional pharmacovigilance activities or efficacy studies imposed as a condition of the marketing authorisation, RMP parts III (pharmacovigilance Plan) and IV (Plan for post-authorisation efficacy studies) may be omitted. Part VI should be based on an appropriately modified version of the summary of the reference medicinal product.

Further guidance will be provided for situations where the reference medicinal product does not have a RMP.

For updates to the RMP, RMP module SV (post-authorisation experience) should be included.

The abridged format suitable for use for generics as described above is called abridged RMP (See annexes).

Figure V.3. Requirements for new marketing applications

Type of new application	Part I	Part II-Module SI	Part II-Module SII	Part II-Module SIII	Part II-Module SIV	Part II-Module SV	Part II-Module SVI	Part II-Module SVII	Part II-Module SVIII	Part III	Part IV	Part V	Part VI	Part VII
New active substance	✓	✓	✓	✓	✓	✓	✓	✓	✓	✓	✓	✓	✓	✓
Similar biological	✓		✓	✓	✓	✓	✓	✓	✓	✓	✓	✓	✓	✓
Generic medicine	✓								✓	✷	✷	✓	✷	✓

✷ Modified requirement
Please note that the naming and numbering of the RMP parts, modules & sections are standardized thus should NOT be changed or renumbered due to the omission of un-required sections.

V.C.4. Submission of the risk management plan

This guidance provides three formats for risk-management plans:

- an integrated RMP with all of the modules in one document (e.g. for innovators not having EU RMP, biosimilars….etc.);
- an abridged format suitable for use for generic medicines;
- the National Display of RMP format suitable for any MAH/Applicants having EU RMP in place (whether innovators, generics or importers), submitted altogether with most updated version EU RMP (for details see V.C.8)

For Arab Countries not applying the eCDT, the RMP is submitted as PDF file (text) on a CD with submission application or submission cover letter as appropriate according to the national requirements.

For Arab Countries applying eCTD, the RMP is submitted as PDF files within the eCTD submission.

Marketing authorisation holders submit the RMP annex I in XML format. RMP annex I provides the key information regarding the RMP in a structured electronic format. Applicable only in some Arab Countries hence this annex should be submitted only upon request from the medicines authority of the Arab Countries concerned. Further details will be announced by authorities who require such annex. In Arab Countries who do not require this annex, it should be omitted (**WITHOUT** changing the numbering of the following annexes).

Other submission requirements may also apply in some Arab Countries. Details of submission requirements will be provided by each national medicines authority.

The initial RMP should be submitted as part of the initial marketing authorisation, or if required, for those products that do not have an RMP, through the appropriate post-authorisation procedure.

Post-authorisation, submission of a new or updated RMP outside of another regulatory procedure may constitute a variation. For details, refer to the national variation regulations or consult with the national medicines authority in the Arab country concerned.

V.C.5. Updates to the risk management plan

If an RMP has previously been submitted by the applicant/marketing authorisation holder for the active substance, any following submissions shall be in the form of an update unless requested otherwise. Each submission of the RMP shall have a distinct version number and shall be dated. When technically feasible, clean and track change versions should be submitted along with a cover letter detailing the changes since the last submitted version.

There are no scheduled "routine" updates to the RMP. In exceptional cases, when justified by risk, the national medicines authority may still specify a date for submission of the next RMP as a condition of the marketing authorisation.

It is the responsibility of the marketing authorisation holder to monitor the safety profile of the product(s) and to update and submit the RMP if there is a significant change to the risk-benefit balance of one or more medicinal products included in the RMP. A significant change would, in particular, usually include extension of indications, clinically important changes to the product information, reaching an important pharmacovigilance milestone and also certain new strengths and formulations.

An updated RMP should be submitted:

- at the request of the national medicines authority;
- whenever the risk-management system is modified, especially as the result of new information being received that may lead to a significant change to the risk-benefit balance or as a result of an important pharmacovigilance or risk-minimisation milestone being reached.

If, when preparing a PSUR, there is a need for consequential changes to the RMP as a result of new safety concerns, or other data, then an updated RMP should be submitted at the same time. In this case no stand-alone RMP variation is necessary.

Should only the timing for submission of both documents coincide, but the changes are not related to each other, the RMP submission should be handled as a stand-alone variation (refer to the local variation regulations).

When the RMP is updated, the risk minimisation plan should include an evaluation of the impact of routine and/or additional risk minimisation activities as applicable (see V.B.11.4.).

For MAH/Applicant submitting EU RMP & its National Display; when the referenced EU RMP is subject to update the National Display of RMP should be updated in accordance.

V.C.5.1. Updates to the risk management plan submitted during a procedure

A medicinal product can only have one "current" version of a RMP.

If several updates to the RMP are submitted during the course of a procedure, the version considered as the "current" RMP for future updates and track changes purposes, shall be the last one submitted before the Opinion. For example, in the final weeks before the Opinion, the RMP may be updated several times to reflect on-going assessment/discussions within the national medicines authority, e.g. changed indications, changes in SmPC wording which affect risk minimisation.

Following the finalisation of the procedure, the final version of the RMP should be provided in eCTD (in Arab Countries applying eCTD). The RMP should reflect the outcome of the procedure – i.e. removal of all references and data which were subject to a negative Opinion. The exception to this requirement is that populations studied in clinical trials related to a negative Opinion may be included in suitably annotated exposure data in RMP module SIII.

Unless requested otherwise, for RMPs updated during (after the start) of a procedure, track changes should show changes since the start of the procedure whilst the cover letter should show changes since the last version was submitted.

For versioning of the RMP the numbering should be consecutive and without added text. The numbering is independent of whether the RMP was endorsed by the national medicines authority or not. The new version of the RMP should be dated.

V.C.6. Procedure for the assessment of the risk management plan within the national medicines authority

The regulatory oversight of RMPs for authorised products lies with the Pharmacovigilance Department (and when appropriate) the pharmacovigilance committee of the national medicines authority.

The national medicines authority may, on a case-by-case basis, consult with healthcare professionals and patients during the assessment of RMPs to gather their input on proposed risk minimisation measures.

V.C.7. Implementation of additional risk minimisation activities

For products with additional risk minimisation activities, it is the responsibility of the marketing authorisation holder and national medicines authority to ensure that all conditions or restrictions with regard to the safe use of the product are complied with prior to the authorisation of the product in the Arab country concerned.

Marketing authorisation holders are responsible for ensuring compliance with the national conditions of the marketing authorisation for their product wherever it is used within the Arab Country concerned.

National medicines authorities should also ensure that any conditions or restrictions with regard to the safe and effective use of authorised product are applied within their territory regardless of the source of the product.

V.C.8. National Display of the RMP (country specific) - for MAH/Applicants having EU RMP in place

Risk management is a global activity. However, because of differences in indication and healthcare systems, target populations may be different across the world and risk minimisation activities will need to **be tailored** to the system in place in a particular country or global region. In addition, differences in disease prevalence and severity, for example, may mean that the benefits of a medicinal product may also vary between regions. Therefore a product may **need different or supplementary activities in the RMP** for each region although there will be core elements which are common to all. For example much of the safety specification will be the same regardless of where the medicinal product is being used but the epidemiology of the disease may vary between e.g. Africa and Europe, and there may be **additional or fewer safety concerns** depending upon the target population and indication.

Furthermore, individual countries may have different health systems and medical practice may differ between countries so the conditions and restrictions in the marketing authorisation may be implemented in different ways depending upon national customs.

MAH/ Applicants are required to submit RMP to the medicines authority of the Arab Country concerned in the situations described in this Module section V.C.3.

Taking into consideration that the core elements of the product's RMP are common and as this guideline was based on the European Good Pharmacovigilance Practice, thus for simplification; MAH/Applicants having EU RMP in place submit both of the following:

1. the most updated version of the EU RMP (referenced EU RMP including its annexes); altogether with
2. the National Display of the RMP (including its annexes) see Annex II.3 for template.

In these circumstances (submitting the National Display and the EU RMP), the following conditions apply:

- When the referenced EU RMP is subject to update the National Display of RMP should be

updated in accordance.

- Minor differences may exist between this guidance and the EU RMP, in this case MAH/Applicant may be asked by the national medicines authority in the Arab Country concerned to submit additional information, use different tables, and/or provide clarification….etc.
- The submitted EU RMP shall be the most updated version.
- The EU RMP shall be submitted with its annexes and reference materials
- Generally, it is required that all the risk management activities applied globally/in the EU to be applied in the concerned Arab Country as well, especially the risk minimization measures including the measurement of their effectiveness. Accordingly, all activities, action plans and details especially the risk minimization ones (including the measurement of their effectiveness) stated in the submitted EU RMP -although unjustifiably skipped in the "National Display of the RMP"- are expected by default to apply to Arab Country concerned and the MAH is required to adhere to them, EXCEPT otherwise clearly stated and justified by the MAH/Applicant in the "National Display of the RMP" and agreed by the national medicines authority.

The purpose of the "National Display of the RMP" is:

- to highlight to what extent the risk management activities proposed to be implemented nationally adhere to the globally implemented plan and;
- to provide justification for any difference (apart from what implemented in EU) whenever exist including the needed national tailoring if any.
- In addition it should include an assessment whether there are any additional national/ region-specific risks or not, describing the may be added activities to manage those additional risks.
- It provides good evidence that the LSR has clear understanding and commitment about the activities that will be implemented on the national level and how they will be implemented.

Guideline on good pharmacovigilance practices (GVP)
For Arab Countries

GVP: Modules

Module VI –Management and reporting of adverse reactions to medicinal products

VI.A. Introduction

VI.A.1. Scope

This Module addresses the requirements which are applicable to national medicines authorities in Arab Countries and marketing authorisation holders as regards the collection, data management and reporting of suspected adverse reactions (serious and non-serious) associated with medicinal products for human use authorised in the Arab Countries. Recommendations regarding the reporting of emerging safety issues or of suspected adverse reactions occurring in special situations are also presented in this Module.

The guidance provided in this Module does not address the collection, management and reporting of events or patterns of use, which do not result in suspected adverse reactions (e.g. asymptomatic overdose, abuse, off-label use, misuse or medication error) or which do not require to be reported as individual case safety report or as Emerging Safety Issues. This information may however need to be collected and presented in periodic safety update reports for the interpretation of safety data or for the benefit risk evaluation of medicinal products. In this aspect, guidance provided in Module VII applies.

All applicable legal requirements detailed in this Module are referenced by the modal verb “shall”. Guidance for the implementation of legal requirements is provided using the modal verb “should”.

VI.A.2. Definitions

The definitions provided hereafter shall be applied for the purpose of this Module. Some general principles presented in the ICH-E2A and ICH-E2D guidelines[16] should also be adhered to; they are included as well in this chapter.

VI.A.2.1. Adverse reaction

An adverse reaction is a response to a medicinal product which is noxious and unintended. This includes adverse reactions which arise from:

- the use of a medicinal product within the terms of the marketing authorisation;
- the use outside the terms of the marketing authorisation, including overdose, off-label use, misuse, abuse and medication errors;
- occupational exposure.

VI.A.2.1.1. Causality

In accordance with the ICH-E2A guideline, the definition of an adverse reaction implies at least a reasonable possibility of a causal relationship between a suspected medicinal product and an adverse event. An adverse reaction, in contrast to an adverse event, is characterised by the fact that a

[16] http://www.ich.org/products/guidelines/efficacy/article/efficacy-guidelines.html

causal relationship between a medicinal product and an occurrence is suspected. For regulatory reporting purposes, as detailed in the ICH-E2D guideline, if an event is spontaneously reported, even if the relationship is unknown or unstated, it meets the definition of an adverse reaction. Therefore all spontaneous reports notified by healthcare professionals, patients or consumers are considered suspected adverse reactions, since they convey the suspicions of the primary sources, unless the reporters specifically state that they believe the events to be unrelated or that a causal relationship can be excluded.

VI.A.2.1.2. Overdose, off-label use, misuse, abuse, occupational exposure

a. Overdose

This refers to the administration of a quantity of a medicinal product given per administration or cumulatively, which is above the maximum recommended dose according to the authorised product information. Clinical judgement should always be applied.

b. Off-label use

This relates to situations where the medicinal product is intentionally used for a medical purpose not in accordance with the authorised product information.

c. Misuse

This refers to situations where the medicinal product is intentionally and inappropriately used not in accordance with the authorised product information.

d. Abuse

This corresponds to the persistent or sporadic, intentional excessive use of a medicinal product, which is accompanied by harmful physical or psychological effects.

e. Occupational exposure

This refers to the exposure to a medicinal product, as a result of one's professional or non-professional occupation.

VI.A.2.2. Medicinal product

A medicinal product is characterised by any substance or combination of substances,

- presented as having properties for treating or preventing disease in human beings; or
- which may be used in or administered to human beings either with a view to restoring, correcting or modifying physiological functions by exerting a pharmacological, immunological or metabolic action, or to making a medical diagnosis.

The scope of this module is not only applicable to medicinal products authorised in the Arab Country concerned but also to any such medicinal products commercialised outside the Arab Country concerned by the same marketing authorisation holder (see VI.C.2.2). Given that a

medicinal product is authorised with a defined composition, all the adverse reactions suspected to be related to any of the active substances being part of a medicinal product authorised in the Arab Country concerned should be managed in accordance with the requirements presented in this module. This is valid independently of the strengths, pharmaceutical forms, routes of administration, presentations, authorised indications, or trade names of the medicinal product.

The guidance provided in this Module also applies, subject to amendments where appropriate, to medicinal products supplied in the context of compassionate use (see VI.C.1.2.2). As the case may be, this guidance may also apply to named patient use.

VI.A.2.3. Primary source

The primary source of the information on a suspected adverse reaction(s) is the person who reports the facts. Several primary sources, such as healthcare professionals and/or a consumer, may provide information on the same case. In this situation, all the primary sources' details, including the qualifications, should be provided in the case report, with the "Primary source(s)" section repeated as necessary in line with the ICH-E2B(R2) guideline.

In accordance with the ICH-E2D guideline,

- a healthcare professional is defined as a medically-qualified person such as a physician, dentist, pharmacist, nurse, coroner or as otherwise specified by local regulations;
- a consumer is defined as a person who is not a healthcare professional such as a patient, lawyer, friend, relative of a patient or carer.

Medical documentations (e.g. laboratory or other test data) provided by a consumer that support the occurrence of the suspected adverse reaction, or which indicate that an identifiable healthcare professional suspects a reasonable possibility of causal relationship between a medicinal product and the reported adverse event, are sufficient to consider the spontaneous report as confirmed by a healthcare professional.

If a consumer initially reports more than one reaction and at least one receives medical confirmation, the whole report should be documented as a spontaneous report confirmed by a healthcare professional and be reported accordingly. Similarly, if a report is submitted by a medically qualified patient, friend, relative of the patient or carer, the case should also be considered as a spontaneous report confirmed by a healthcare professional.

VI.A.2.4 Seriousness

As described in the ICH-E2A guideline, a serious adverse reaction corresponds to any untoward medical occurrence that at any dose results in death, is life-threatening, requires inpatient hospitalisation or prolongation of existing hospitalisation, results in persistent or significant disability or incapacity, is a congenital anomaly/birth defect.

The characteristics/consequences should be considered at the time of the reaction to determine the seriousness of a case. For example, life-threatening refers to a reaction in which the patient was at risk of death at the time of the reaction; it does not refer to a reaction that hypothetically might have caused death if more severe.

Medical judgement should be exercised in deciding whether other situations should be considered as serious reactions. Some medical events may jeopardise the patient or may require an intervention to prevent one of the above characteristics/consequences. Such important medical events should be considered as serious[17]. The EudraVigilance Expert Working Group has co-ordinated the development of an important medical event (IME) terms list based on the Medical Dictionary for Regulatory Activities (MedDRA). This IME list aims to facilitate the classification of suspected adverse reactions, the analysis of aggregated data and the assessment of the Individual Case Safety Reports (ICSRs) in the framework of the day-to-day pharmacovigilance activities. The IME list is intended for guidance purposes only and is available on the EudraVigilance web site[18] to stakeholders who wish to use it for their pharmacovigilance activities; accordingly, **this list is acknowledged in the Arab Countries**. The list is regularly updated in line with the latest version of MedDRA.

VI.A.2.5. Individual Case Safety Report (ICSR)

This refers to the format and content for the reporting of one or several suspected adverse reactions in relation to a medicinal product that occur in a single patient at a specific point of time. A valid ICSR should include at least one identifiable reporter, one single identifiable patient, at least one suspect adverse reaction and at least one suspect medicinal product.

VI.B. Structures and Processes

Section B of this Module highlights the general principles in relation to the collection, recording and reporting of reports of suspected adverse reactions associated with medicinal products for human use, which are applicable to medicines authorities and marketing authorisation holders. The definitions and recommendations provided in VI.A should be followed. Requirements in Arab Countries are presented in VI.C.

VI.B.1. Collection of reports

Medicines authorities and marketing authorisation holders should take appropriate measures in order to collect and collate all reports of suspected adverse reactions associated with medicinal products for human use originating from unsolicited or solicited sources.

For this purpose, a pharmacovigilance system should be developed to allow the acquisition of sufficient information for the scientific evaluation of those reports.

The system should be designed so that it helps to ensure that the collected reports are authentic, legible, accurate, consistent, verifiable and as complete as possible for their clinical assessment.

All notifications that contain pharmacovigilance data should be recorded and archived in compliance with the applicable data protection requirements (see VI.C.6.2.2.8 for recommendations

[17] Examples are provided in Section II.B of ICH E2A guideline.

[18] (http://eudravigilance.ema.europa.eu/human/textforIME.asp).

in Arab Countries).

The system should also be structured in a way that allows for reports of suspected adverse reactions to be validated (see VI.B.2) in a timely manner and exchanged between medicines authorities and marketing authorisation holders within the legal reporting time frame (see VI.B.7.1).

In accordance with the ICH-E2D guideline, two types of safety reports are distinguished in the post-authorisation phase; reports originating from unsolicited sources and those reported as solicited.

VI.B.1.1. Unsolicited reports

VI.B.1.1.1. Spontaneous reports

A spontaneous report is an unsolicited communication by a healthcare professional, or consumer to a medicines authority, marketing authorisation holder or other organisation (e.g. Regional Pharmacovigilance Centre, Poison Control Centre) that describes one or more suspected adverse reactions in a patient who was given one or more medicinal products and that does not derive from a study or any organised data collection systems where adverse events reporting is actively sought, as defined in VI.B.1.2.

Stimulated reporting that occurs consequent to a "Direct Healthcare Professional Communication", publication in the press, questioning of healthcare professionals by company representatives, communication from patients' organisations to their members, or class action lawsuits should be considered spontaneous reports.

Unsolicited consumer adverse reactions reports should be handled as spontaneous reports irrespective of any subsequent "medical confirmation".

The reporting modalities and applicable time frames for spontaneous reports are described in VI.B.7 and VI.B.8.

VI.B.1.1.2. Literature reports

The scientific and medical literature is a significant source of information for the monitoring of the safety profile and of the risk-benefit balance of medicinal products, particularly in relation to the detection of new safety signals or emerging safety issues.

1. Marketing authorisation holders are therefore expected to maintain awareness of possible publications through a systematic literature review of widely used reference databases (e.g. Medline, Excerpta Medica or Embase) no less frequently than once a week.
2. The marketing authorisation holder should ensure that the literature review includes the use of reference databases that contain the largest reference of articles in relation to the medicinal product properties[19].
3. In addition, marketing authorisation holders should have procedures in place to monitor scientific and medical publications in local journals in countries where medicinal products have

[19] See VI. Appendix 2. for the detailed guidance on the monitoring of medical and scientific literature.

a marketing authorisation, and to bring them to the attention of the company safety department as appropriate.

4. Reports of suspected adverse reactions from the scientific and medical literature, including relevant published abstracts from meetings and draft manuscripts, should be reviewed and assessed by marketing authorisation holders to identify and record ICSRs originating from spontaneous reports or non-interventional post-authorisation studies.

If multiple medicinal products are mentioned in the publication, only those which are identified by the publication's author(s) as having at least a possible causal relationship with the suspected adverse reaction should be considered by the concerned marketing authorisation holder(s).

Valid ICSRs should be reported according to the modalities detailed in VI.B.7 and VI.B.8.

One case should be created for each single patient identifiable based on characteristics provided in VI.B.2. Relevant medical information should be provided and the publication author(s) should be considered as the primary source(s).

VI.B.1.1.3. Reports from other sources

If a marketing authorisation holder becomes aware of a report of suspected adverse reactions originating from a non-medical source, for example the lay press or other media, it should be handled as a spontaneous report. Every attempt should be made to follow-up the case to obtain the minimum information that constitutes a valid ICSR. The same reporting time frames should be applied as for other spontaneous reports.

VI.B.1.1.4. Information on suspected adverse reactions from the internet or digital media

Marketing authorisation holders should regularly screen internet or digital media[20] under their management or responsibility, for potential reports of suspected adverse reactions. In this aspect, digital media is considered to be company sponsored if it is owned, paid for and/or controlled by the marketing authorisation holder[21]. The frequency of the screening should allow for potential valid ICSRs to be reported to the medicines authorities within the appropriate reporting timeframe based on the date the information was posted on the internet site/digital medium. Marketing authorisation holders may also consider utilising their websites to facilitate the collection of reports of suspected adverse reactions (See VI.C.2.2.1)

If a marketing authorisation holder becomes aware of a report of suspected adverse reaction described in any non-company sponsored digital medium, the report should be assessed to determine whether it qualifies for reporting.

Unsolicited cases of suspected adverse reactions from the internet or digital media should be handled as spontaneous reports. The same reporting time frames as for spontaneous reports should

[20] Although not exhaustive, the following list should be considered as digital media: web site, web page, blog, vlog, social network, internet forum, chat room, health portal.

[21] A donation (financial or otherwise) to an organisation/site by a marketing authorisation holder does not constitute ownership, provided that the marketing authorisation holder does not control the final content of the site.

be applied (see VI.B.7).

In relation to cases from the internet or digital media, the identifiability of the reporter refers to the existence of a real person, that is, it is possible to verify the contact details of the reporter (e.g., an email address under a valid format has been provided). If the country of the primary source is missing, the country where the information was received, or where the review took place, should be used as the primary source country.

VI.B.1.2. Solicited reports

As defined in ICH-E2D guideline, solicited reports of suspected adverse reactions are those derived from organised data collection systems, which include clinical trials, non-interventional studies, registries, post-approval named patient use programmes, other patient support and disease management programmes, surveys of patients or healthcare providers, compassionate use or name patient use, or information gathering on efficacy or patient compliance. Adverse reactions reports obtained from any of these data collection systems should not be considered spontaneous. This is with the exception of suspected adverse reactions originating from certain compassionate use or named patient use where adverse events are not actively sought (See VI.C.1.2.2).

For the purpose of safety reporting, solicited reports should be classified as study reports, and should have an appropriate causality assessment, to consider whether they refer to suspected adverse reactions and therefore meet the criteria for reporting.

General reporting rules for suspected adverse reactions occurring in organised data collection systems conducted in the Arab Country concerned are presented in VI.C.1.

VI.B.2. Validation of reports

Only valid ICSRs qualify for reporting. All reports of suspected adverse reactions should therefore be validated before reporting them to the medicines authorities to make sure that the minimum criteria for reporting are included in the reports (ICH-E2D guideline). This is:

- **One or more identifiable reporter (primary source)**, characterised by qualification (e.g. physician, pharmacist, other healthcare professional, lawyer, consumer or other non-healthcare professional) name, initials or address[22]. Whenever possible, contact details for the reporter should be recorded so that follow-up activities can be performed. However, if the reporter does not wish to provide contact details, the ICSR should still be considered as valid providing the organisation who was informed of the case was able to confirm it directly with the reporter. All parties providing case information or approached for case information should be identifiable, not only the initial reporter.
- **One single identifiable patient** characterised by initials, patient identification number, date of birth, age, age group or gender. The information should be as complete as possible [22].
- One or more suspected substance/medicinal product (see VI.A.2.2).
- **One or more suspected adverse reaction** (see VI.A.2.1). The report does NOT qualify as a

[22] Local data privacy laws regarding patient's and reporter's identifiability might apply.

valid ICSR in the following situations:

- If the primary source has made an explicit statement that a causal relationship between the medicinal product and the adverse event has been excluded and the receiver (medicines authority or marketing authorisation holder) agrees with this, the report does not qualify as a valid ICSR since the minimum information is incomplete[23].
- If it is reported that the patient experienced an unspecified adverse reaction and there is no information provided on the type of adverse reaction experienced.
- If only an outcome (or consequence) is notified and

  (i) no further information about the clinical circumstances is provided to consider it as a suspected adverse reaction, or

  (ii) the primary source has not indicated a possible causal relationship with the suspected medicinal product.

  For instance a marketing authorisation holder is made aware that a patient was hospitalised or died, without any further information. In this particular situation, medical judgement should always be applied in deciding whether the notified information is an adverse reaction or an event. For example, a report of sudden death would usually need to be considered as a case of suspected adverse reaction and reported.

The lack of any of these four elements means that the case is considered incomplete and does not qualify for reporting. Marketing authorisation holders are expected to exercise due diligence in following up the case to collect the missing data elements (the same rule apply to the medicines authorities if they received such incomplete case directly from the reporter). Reports, for which the minimum information is incomplete, should nevertheless be recorded within the pharmacovigilance system for use in on-going safety evaluation activities. Recommendations on the electronic reporting of valid ICSRs, when missing information has been obtained, are provided in VI.C.6.2.3.8.

When collecting reports of suspected adverse reactions via the internet or digital media, the term "identifiable" refers to the possibility of verification of the existence of a reporter and a patient (see VI.B.1.1.4).

When one party (medicines authority or a marketing authorisation holder) is made aware that the primary source may also have reported the suspected adverse reaction to another concerned party, the report should still be considered as a valid ICSR. All the relevant information necessary for the detection of the duplicate case should be included in the ICSR[24].

A valid case of suspected adverse reaction initially submitted by a consumer can NOT be downgraded to a report of non-related adverse event if the contacted healthcare professional (nominated by the consumer for follow-up information) disagrees with the consumer's suspicion (see VI.A.2.1.1). In this situation, the opinions of both the consumer and the healthcare professional

[23] There is no suspected adverse reaction.

[24] For further guidance on reporting of other duplicate ICSRs, refer to ICH-E2B(R2) guideline Section A.1.11 "Other case identifiers in previous transmission".

should be included in the ICSR. Guidance on the reporting of the medical confirmation of a case, provided in *ICH-E2B(R2) guideline Section A.1.14 ("Was the case medically confirmed, if not initially from a healthcare professional?"),* should be followed.

For solicited reports of suspected adverse reactions (see VI.B.1.2), where the receiver disagrees with the reasonable possibility of causal relationship between the suspected medicinal product and the adverse reaction expressed by the primary source, the case should NOT be downgraded to a report of non-related adverse event. The opinions of both, the primary source and the receiver, should be recorded in the ICSR.

The same principle applies to the ICSR seriousness criterion, which should NOT be downgraded from serious to non-serious if the receiver disagrees with the seriousness reported by the primary source.

VI.B.3. Follow-up of reports

When first received, the information in suspected adverse reactions reports may be incomplete. These reports should be followed-up as necessary to obtain supplementary detailed information significant for the scientific evaluation of the cases. This is particularly relevant for monitored events of special interest, prospective reports of pregnancy, cases notifying the death of a patient, cases reporting new risks or changes in the known risks. This is in addition to any effort to collect missing minimum information (see VI.B.2). Any attempt to obtain follow-up information should be documented.

Follow-up methods should be tailored towards optimising the collection of missing information. This should be done in ways that encourage the primary source to submit new information relevant for the scientific evaluation of a particular safety concern. The use of targeted specific forms in the local language should avoid requesting the primary source to repeat information already provided in the initial report and/or to complete extensive questionnaires, which could discourage future spontaneous reporting. Therefore, consideration should be given to pre-populating some data fields in those follow-up report forms to make their completion by the primary source easy.

When information is received directly from a consumer suggesting that an adverse reaction may have occurred, if the information is incomplete, attempts should be made to obtain consent to contact a nominated healthcare professional to obtain further follow-up information. When such a case, initially reported by a consumer, has been confirmed (totally or partially) by a healthcare professional, this information should be clearly highlighted in the ICSR[25].

For suspected adverse reactions relating to biological medicinal products, the definite identification of the concerned product with regard to its manufacturing is of particular importance. Therefore, all appropriate measures should be taken to clearly identify the name of the product and the batch number. A business process map in relation to the mandatory follow-up of information for the identification of suspected biological medicinal products is presented in VI.Appendix 1.

For cases related to vaccines, the recommendations provided in the Guideline on the conduct of

[25] For further guidance on reporting this information, refer to ICH-E2B (R2) guideline, Section A.1.14 ("Was the case medically confirmed, if not initially from a healthcare professional?").

Pharmacovigilance for Vaccines for Pre-and Post-exposure Prophylaxis against Infectious Diseases should also be followed as appropriate.

VI.B.4. Data management

Electronic data and paper reports of suspected adverse reactions should be stored and treated in the same way as other medical records with appropriate respect for confidentiality regarding patients' and reporters' identifiability and in accordance with local data privacy laws. Confidentiality of patients' records including personal identifiers, if provided, should always be maintained. Identifiable personal details of reporting healthcare professionals should be kept in confidence. With regards to patient's and reporter's identifiability, case report information should be transmitted between stakeholders (marketing authorisation holders or medicines authorities) in accordance with local data privacy laws (see VI.C.6.2.2.8 for the processing of personal data in ICSRs in the Arab Countries).

In order to ensure pharmacovigilance data security and confidentiality, strict access controls should be applied to documents and to databases to authorised personnel only. This security extends to the complete data path. In this aspect, procedures should be implemented to ensure security and non-corruption of data during data transfer.

When transfer of pharmacovigilance data occurs within an organisation or between organisations having concluded contractual agreements, the mechanism should be such that there is confidence that all notifications are received; in that, a confirmation and/or reconciliation process should be undertaken.

Correct data entry, including the appropriate use of terminologies, should be verified by quality assurance auditing, either systematically or by regular random evaluation. Data entry staff should be instructed in the use of the terminologies, and their proficiency confirmed.

Data received from the primary source should be treated in an unbiased and unfiltered way and inferences as well as imputations should be avoided during data entry or electronic transmission. The reports should include the verbatim text as used by the primary source or an accurate translation of it. The original verbatim text should be coded using the appropriate terminology as described in VI.B.8.

Electronic data storage should allow traceability (audit trail) of all data entered or modified, including dates and sources of received data, as well as dates and destinations of transmitted data.

A procedure should be in place to account for identification and management of duplicate cases at data entry and during the generation of aggregated reports (see VI.C.6.2.4).

VI.B.5. Quality management

Medicines authorities and marketing authorisation holders should have a quality management system in place to ensure compliance with the necessary quality standards at every stage of case documentation, such as data collection, data transfer, data management, data coding, case validation, case evaluation, case follow-up, ICSR reporting and case archiving (see VI.C.6.2.4 and Module I). Conformity of stored data with initial and follow-up reports should be verified by quality

control procedures, which permit for the validation against the original data or images thereof. In this aspect, the source data (e.g., letters, emails, records of telephone calls that include details of an event) or an image of the source data should be easily accessible.

Clear written standard operating procedures should guarantee that the roles and responsibilities and the required tasks are clear to all parties involved and that there is provision for proper control and, when needed, change of the system. This is equally applicable to activities that are contracted out to third parties, whose procedures should be reviewed to verify that they are adequate and compliant with applicable requirements.

Staff directly performing pharmacovigilance activities, should be appropriately trained in applicable pharmacovigilance legislation and guidelines in addition to specific training in report processing activities for which they are responsible and/or undertake. Other personnel who may receive or process safety reports (e.g. clinical development, sales, medical information, legal, quality control) should be trained in adverse event collection and reporting in accordance with internal policies and procedures.

VI.B.6. Special situations

VI.B.6.1. Use of a medicinal product during pregnancy or breastfeeding

a. Pregnancy

Reports, where the embryo or foetus may have been exposed to medicinal products (either through maternal exposure or transmission of a medicinal product via semen following paternal exposure), should be followed-up in order to collect information on the outcome of the pregnancy and development of the child after birth. The recommendations provided in the Guideline on the Exposure to Medicinal Products during Pregnancy: Need for Post-Authorisation Data should be considered as regard the monitoring, collection and reporting of information in these specific situations in order to facilitate the scientific evaluation. When an active substance (or one of its metabolites) has a long half-life, this should be taken into account when assessing the possibility of exposure of the embryo, if the medicinal product was taken before conception.

Not infrequently, pregnant women or healthcare professionals will contact either medicines authorities or marketing authorisation holders to request information on the teratogenicity of a medicinal product and/or experience of use during pregnancy. Reasonable attempts should be made to obtain information on any possible medicinal product exposure to an embryo or foetus and to follow-up on the outcome of the pregnancy.

Reports of exposure to medicinal products during pregnancy should contain as many detailed elements as possible in order to assess the causal relationships between any reported adverse events and the exposure to the suspected medicinal product. In this context, the use of standard structured questionnaires is recommended.

Individual cases with an abnormal outcome associated with a medicinal product following exposure during pregnancy are classified as serious reports and should be reported, in accordance with the requirements outlined in VI.B.7. (See VI.C.6.2.3.1 for electronic reporting recommendations in the

Arab Countries)

This especially refers to:

- reports of congenital anomalies or developmental delay, in the foetus or the child;
- reports of foetal death and spontaneous abortion; and
- reports of suspected adverse reactions in the neonate that are classified as serious.

Other cases, such as reports of induced termination of pregnancy without information on congenital malformation, reports of pregnancy exposure without outcome data or reports which have a normal outcome, should not be reported since there is no suspected adverse reaction. These reports should however be collected and discussed in the periodic safety update reports (See Module VII).

However, in certain circumstances, reports of pregnancy exposure with no suspected reactions may necessitate to be reported. This may be a condition of the marketing authorisation or stipulated in the risk management plan; for example pregnancy exposure to medicinal products contraindicated in pregnancy or medicinal products with a special need for surveillance because of a high teratogenic potential (e.g. thalidomide, isotretinoin).

A signal of a possible teratogen effect (e.g. through a cluster of similar abnormal outcomes) should be notified immediately to the medicines authorities in accordance with the recommendations presented in VI.C.2.2.6.

b. Breastfeeding

Suspected adverse reactions which occur in infants following exposure to a medicinal product from breast milk should be reported in accordance with the criteria outlined in VI.B.7 (See VI.C.6.2.3.1 for electronic reporting recommendations in the Arab Countries).

VI.B.6.2. Use of a medicinal product in a paediatric or elderly population

The collection of safety information in the paediatric or elderly population is important. Reasonable attempts should therefore be made to obtain and submit the age or age group of the patient when a case is reported by a healthcare professional, or consumer in order to be able to identify potential safety signals specific to a particular population.

As regards the paediatric population, the Guideline on conduct of pharmacovigilance for medicines used by the paediatric population should be followed.

VI.B.6.3. Reports of overdose, abuse, off-label use, misuse, medication error or occupational exposure

For the purpose of this Module, medication error refers to any unintentional error in the prescribing, dispensing, or administration of a medicinal product while in the control of the healthcare professional, patient or consumer.

Reports of overdose, abuse, off-label use, misuse, medication error or occupational exposure with no associated adverse reaction should not be reported as ICSRs. They should be considered in periodic safety update reports as applicable. When those reports constitute safety issues impacting

on the risk-benefit balance of the medicinal product, they should be notified to the medicines authorities in accordance with the recommendations provided in VI.C.2.2.6.

Reports associated with suspected adverse reactions should be subject to reporting in accordance with the criteria outlined in VI.B.7 and with the electronic reporting requirements described in VI.C.6.2.3.3. They should be routinely followed-up to ensure that the information is as complete as possible with regards to the symptoms, treatments, outcomes, context of occurrence (e.g., error in prescription, administration, dispensing, dosage, unauthorised indication or population, etc.).

VI.B.6.4. Lack of therapeutic efficacy

Reports of lack of therapeutic efficacy should be recorded and followed-up if incomplete. They should not normally be reported, but should be discussed in periodic safety update reports as applicable. However, in certain circumstances, reports of lack of therapeutic efficacy may require to be reported within a 15-day time frame (See VI.C.6.2.3.4 as regards electronic reporting in the Arab Countries). Medicinal products used in critical conditions or for the treatment of life-threatening diseases, vaccines, contraceptives are examples of such cases. This applies unless the reporter has specifically stated that the outcome was due to disease progression and was not related to the medicinal product.

Clinical judgment should be used when considering if other cases of lack of therapeutic efficacy qualify for reporting. For example, an antibiotic used in a life-threatening situation where the medicinal product was not in fact appropriate for the infective agent should not be reported. However, a life-threatening infection, where the lack of therapeutic efficacy appears to be due to the development of a newly resistant strain of a bacterium previously regarded as susceptible, should be reported within 15 days.

For vaccines, cases of lack of therapeutic efficacy should be reported, in particular with the view to highlight potential signals of reduced immunogenicity in a sub-group of vaccinees, waning immunity, or strain replacement. With regard to the latter, it is considered that spontaneously reported cases of lack of therapeutic efficacy by a healthcare professional may constitute a signal of strain replacement. Such a signal may need prompt action and further investigation through post-authorisation safety studies as appropriate. General guidance regarding the monitoring of vaccines failure, provided in the Report of CIOMS/WHO Working Group on Vaccine Pharmacovigilance [26], may be followed.

VI.B.7. Reporting of ICSRs

Only valid ICSRs (see VI.B.2) should be reported. The clock for the reporting of a valid ICSR starts as soon as the information containing the minimum reporting criteria has been brought to the attention of any personnel of the marketing authorisation holder, including medical representatives and contractors. This date should be considered as day zero. In practice this is the first business day the receiver becomes aware of the information.

Where the marketing authorisation holder has set up contractual arrangements with a person or an

[26] Definition and Application of Terms for vaccine Pharmacovigilance, 2012

organisation, explicit procedures and detailed agreements should exist between the marketing authorisation holder and the person/organisation to ensure that the marketing authorisation holder can comply with the reporting obligations. These procedures should in particular specify the processes for exchange of safety information, including timelines and regulatory reporting responsibilities and should avoid duplicate reporting to the medicines authorities.

For ICSRs described in the scientific and medical literature (See VI.B.1.1.2), the clock starts (day zero) with awareness of a publication containing the minimum information for reporting. Where contractual arrangements are made with a person/organisation to perform literature searches and/or report valid ICSRs, detailed agreements should exist to ensure that the marketing authorisation holder can comply with the reporting obligations.

When additional significant information is received for a previously reported case, the reporting time clock starts again for the submission of a follow-up report from the date of receipt of the relevant follow-up information. For the purpose of reporting, significant follow-up information corresponds to new medical or administrative information that could impact on the assessment or management of a case or could change its seriousness criteria; non-significant information includes updated comments on the case assessment or corrections of typographical errors in the previous case version. See also VI.C.6.2.2.7 as regards the distinction between significant and non-significant follow-up information.

VI.B.7.1. Reporting time frames

In general, the reporting of serious valid ICSRs is required as soon as possible, but in no case later than 15 calendar days after initial receipt of the information by any personnel of the marketing authorisation holder, including medical representatives and contractors. This applies to initial and follow-up information. Where a case initially reported as serious becomes non-serious, based on new follow-up information, this information should still be reported within 15 days; the reporting time frame for non-serious reports should then be applied for the subsequent follow-up reports.

- Reporting of non-serious valid ICSRs is required within 90 calendar days from the date of receipt of the reports marketing authorisation holders.

VI.B.8. Reporting modalities

Taking into account the international dimension of adverse reactions reporting and the need to achieve harmonisation and high quality between all involved parties, ICSRs should be submitted electronically as structured data with the use of controlled vocabularies for the relevant data elements where applicable. In this aspect, with regard to the content and format of electronic ICSRs, medicines authorities and marketing authorisation holders should adhere to the following internationally agreed ICH[27] guidelines and standards:

- ICH M1 terminology - Medical Dictionary for Regulatory Activities (MedDRA);
- MedDRA Term Selection: Points to Consider Document - The latest version of the

[27] http://www.ich.org/

ICH-endorsed Guide for MedDRA Users;

- ICH M2 EWG - Electronic Transmission of Individual Case Safety Reports Message Specification;
- ICH E2B(R2) - Maintenance of the ICH Guideline on Clinical Safety Data Management: Data Elements for Transmission of Individual Case Safety Reports.While the implementation of ICH-E2B(R3) is being prepared for, ICH-E2B(R2) remains the currently applicable format for transmission of individual case safety reports;
- ICH E2B Implementation Working Group - Questions & Answers (R5) (March 3, 2005);

As technical standards evolve over time, the above referred documents may require revision and maintenance. In this context, the latest version of these documents should always be taken into account.

Information regarding Arab Countries specific reporting modalities is provided in VI.C.4.

VI.C. Operation in the Arab Countries

Section C of this Module highlights the Arab Countries specific requirements in relation to the collection, management and reporting of reports of suspected adverse reactions (serious and non-serious) associated with medicinal products for human use authorised in the Arab Country concerned, independently of their condition of use. They are applicable to medicines authorities in Arab Countries and/or to marketing authorisation holders. Section C should be read in conjunction with the definitions and general principles detailed in VI.A and VI.B of this Module.

VI.C.1. Interface with safety reporting rules for clinical trials and post authorisation studies in the Arab Countries

The pharmacovigilance rules laid down in this guideline do not apply to *investigational medicinal products* and *non-investigational medicinal products*[28] *used in clinical trials* conducted in accordance with the "National rules governing interventional clinical trials of medicinal products".

Post-authorisation safety or efficacy studies requested by medicines authorities in Arab Countries, or conducted voluntarily by marketing authorisation holders, can either be **clinical trials** or **non-interventional studies** as shown in Figure VI.1. Both types differ in their safety reporting requirement as discussed below.

Further guidance on post-authorisation safety studies is provided in Module VIII.

The different types of studies and clinical trials which can be conducted in the Arab Countries are illustrated in Figure VI.1.

1. The safety reporting for **clinical trials** corresponding to Section A, B, C and D of Figure VI.1 follows the requirements of "national regulation for pharmacovigilance of clinical trials" and the "national rules governing interventional clinical trials of medicinal products". (this guideline

[28] For guidance on these terms, see "national regulation for pharmacovigilance of clinical trials".

does not apply for

2. The safety reporting for **non-interventional studies** corresponding to section E and F follows the requirements of"this guideline "Good pharmacovigilance practice in the Arab Countries".

Suspected adverse reactions should not be reported under both regulations, as this creates duplicate reports.

The reporting rules of solicited reports of suspected adverse reactions to the "National Pharmacovigilance and Safety reports database"are dependent on the types of organised collection systems where they occurred; recommendations provided in VI.C.6.2.1 should be followed.

Figure VI.1. Diagram illustrating different types of clinical trials and studies in the Arab Countries

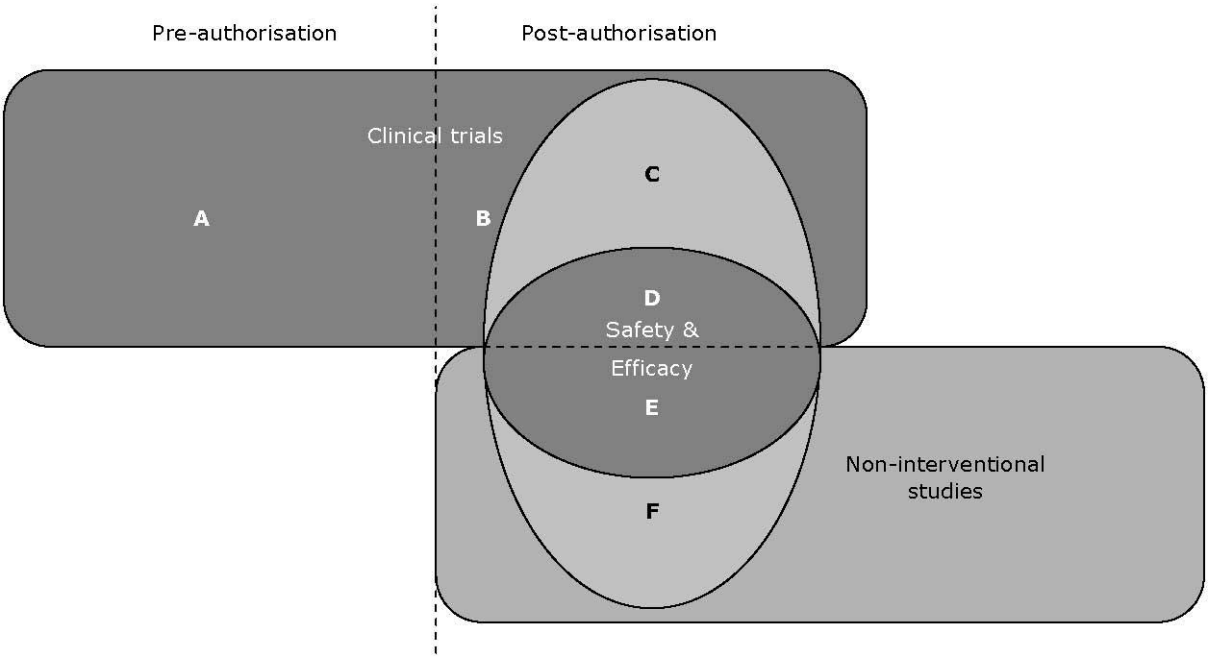

Section A: **Clinical trials** which are conducted when no marketing authorisation exists in the Arab County concerned (i.e.pre-authorisation).

Section B: **Clinical trials** which are conducted in the post-authorisation period, e.g. for new indication.

Section C: **Post-authorisation clinical trials** conducted in accordance with the summary of product characteristics (SmPC) indication and condition of use, but which fall under the scope of clinical trials regulations due to the nature of the intervention.

Section D: **Post-authorisation safety or efficacy clinical trials** requested or conducted voluntarily by marketing authorisation holders, but which fall under the scope of clinical trials regulations due to the nature of the intervention.

Section E: Non-interventional post-authorisation safety or efficacy **studies** requested or conducted voluntarily by the marketing authorisation holders and which follow the requirements of this guideline.

Section F: Non-interventional post-authorisation **studies** conducted in accordance with SmPC indication and condition of use and which fall under the scope of Non-interventional studies regulations.

VI.C.1.1. Interface with clinical trials

A suspected adverse reaction to an investigational medicinal product occurring in a clinical trial is excluded from the scope of this Module.

If a clinical trial yields safety concerns which impact on the risk-benefit balance of an authorised medicinal product, the medicines authorities in the Arab Countries where the medicinal product is authorised should be notified immediately in accordance with the modalities detailed in VI.C.2.2.6. This applies as well if a safety concern arises from a clinical trial conducted exclusively outside the Arab Country concerned.

The safety data from clinical trials to be presented in the relevant sections of the periodic safety update report of the authorised medicinal product are detailed in Module VII.

Where an untoward and unintended response originating from a clinical trial is suspected to be related only to a non-investigational medicinal product (or another medicinal product, which is not part of the clinical trial protocol) and does not result from a possible interaction with the investigational medicinal product, it does NOT follow the expedited reporting requirements of the national regulation for pharmacovigilance of clinical trials which apply only to the investigational medicinal product. The investigator or the sponsor is encouraged to report the case to the medicines authority in the Arab Country where the reaction occurred or to the marketing authorisation holder of the suspected medicinal product, but not to both to avoid duplicate reporting. Where made aware of such case, the medicines authority or the marketing authorisation holder should apply the reporting requirements described in VI.C.3, VI.C.4 and VI.C.6 . As regards electronic reporting, the recommendations detailed in VI.C.6.2.3.7 should be followed.

VI.C.1.2. Interface with post-authorisation studies

In the context of this module, post-authorisation studies are organised data collection systems which do not fall under the scope of the clinical trials regulations.

They include non-interventional post-authorisation studies, compassionate use, named patient use, other patient support and disease management programmes, registries, surveys of patients or healthcare providers, and information gathering on efficacy or patient compliance. They may involve the receipt of information on adverse events.

Medicines authorities in Arab Countries and marketing authorisation holders should have in place a system to collect full and comprehensive case information and to evaluate that information in order to determine whether the collected adverse events are possibly related to the studied (or supplied) medicinal product and should be classified and processed as ICSRs of suspected adverse reactions.

Different methods may be applied for assessing the causal role of a medicinal product on the reported adverse event (e.g. WHO-UMC system for standardised case causality assessment). In this situation, the levels of causality, which correspond to a reasonable possibility of causal relationship, should be established in advance in order to determine when an adverse event is considered as an

adverse reaction.

Only valid ICSRs (See VI.B.2) of adverse reactions, which are suspected to be related to the studied (or supplied) medicinal product by the primary source or the receiver of the case, should be reported. They should be considered as solicited reports (with the exception of certain reports from compassionate use or named patient use (See VI.C.1.2.2)) and reported by marketing authorisation holders in accordance with the requirements provided in VI.C.3, VI.C.4 and VI.C.6. Other reports of adverse events should only be included in the study report, where applicable.

Electronic reporting recommendations for cases originating in post-authorisation studies are detailed in VI.C.6.2.3.7.

It may happen that reports of adverse reactions are only suspected to be related to other medicinal products which are not subject to the scope of the post-authorisation study. If there is no interaction with the studied (or supplied) medicinal product, these reports should be notified by the primary source, to the medicines authority in the Arab Country where the reaction occurred or to the marketing authorisation holder of the suspected medicinal product, but not to both to avoid duplicate reporting. Where made aware of such case, the concerned medicines authorities or marketing authorisation holders should apply the reporting requirements described in VI.C.6.2.3.7

Further guidance on post-authorisation studies conducted by marketing authorisation holders is provided in VI.C.2.2.2.

Academic sponsors should follow local requirements as regards the reporting of cases of suspected adverse reactions to the medicines authority in the Arab Country where the reaction occurred. However, where a study is directly financed, or where the design is influenced by a marketing authorisation holder, the marketing authorisation holder should fulfil the reporting requirements detailed in this Module.

VI.C.1.2.1. Non-interventional studies

Non-interventional studies should be distinguished between those with primary data collection directly from consumers and healthcare professionals, and study designs which are based on secondary use of data such as studies based on medical chart reviews or electronic healthcare records, systematic reviews or meta-analyses.

- Non-interventional studies with primary data collection directly from patients and healthcare professionals should be considered as organised data collection systems where adverse events are actively sought. Only reports of adverse reactions suspected to be related to the studied medicinal product should be reported. Reports of adverse events should only be summarised in the study report, where applicable.
- For non-interventional study designs which are based on secondary use of data, adverse reactions reporting is not required. Reports of adverse events/reactions should only be summarised in the study report, where applicable.
- In case of doubt, the reporting requirement should be clarified with the concerned medicines authorities in the Arab Countries.
- With regard the reporting of cases of suspected adverse reactions to local ethics committees and investigators, the national legislation should be followed as applicable.

VI.C.1.2.2. Compassionate use, named patient use

Where an organization *(e.g. sponsor, applicant, marketing authorisation holder, hospital or wholesaler)* or a healthcare professional, supplying a medicinal product under compassionate use or named patient use (see VI.A.2.2 for definitions), is notified or becomes aware of an adverse event, it should be managed as followed depending on the requirements in the concerned Arab Country:

- For compassionate and named patient uses where adverse events are **actively** sought, only reports of adverse reactions suspected to be related to the supplied medicinal product should be reported. They should be considered as solicited reports.
- For compassionate and named patient uses where the reporting of adverse events is not solicited, any notified noxious or unintended response to the supplied medicinal product should be considered as a spontaneous report of suspected adverse reaction by the receiver of the case.

VI.C.2. Collection of reports

VI.C.2.1. National medicines authorities responsibilities

1. Each Arab Country shall have in place a system for the collection and recording of unsolicited and solicited reports of suspected adverse reactions that occur in its territory and which are brought to its attention by healthcare professionals, consumers, or marketing authorisation holders. In this context, national medicines authorities in Arab Countries shall establish procedures for collecting and recording all reports of suspected adverse reactions that occur in their territory. The general principles detailed in VI.B, together with the reporting modalities presented in VI.C.3, VI.C.4 and VI.C.6 should be applied to those reports.
2. Pharmacovigilance data and documents relating to individual authorised medicinal products shall be retained as long as the product is authorised and for at least 10 years after the marketing authorisation has expired. However, the documents shall be retained for a longer period where national law so requires.
3. Each Arab Country shall take all appropriate measures to encourage healthcare professionals and consumers in their territory to report suspected adverse reactions to their national medicines authority. In addition, the national medicines authority in an Arab Country may impose specific obligations on healthcare professionals.
4. To this end, national medicines authorities in Arab Countries shall facilitate in their territory the reporting of suspected adverse reactions by means of alternative straightforward **reporting systems**, accessible to healthcare professionals and consumers, in addition to **web-based formats**. Information on the different ways of reporting suspected adverse reactions related to medicinal products, shall be made publicly available including by means of national medicines web-based portals (official websites). To increase awareness of the reporting systems, organisations representing consumers and healthcare professionals may be involved as appropriate.
5. Standard web-based structured forms for the reporting of suspected adverse reactions by

healthcare professionals and consumers shall be developed by national medicines authority in order to collect -across the Country- harmonised information relevant for the evaluation of suspected adverse reactions, including errors associated with the use of medicinal products. In this context, core data fields for reporting will be made available by the national medicines authority in the Arab Country for use in its national reporting systems as applicable.

6. The reports of suspected adverse reactions received from healthcare professionals and consumers should be acknowledged where appropriate and further information should be provided to the reporters as requested and when available.
7. For reports submitted by a marketing authorisation holder, Arab Country on whose territory the suspected adverse reaction occurred may involve the marketing authorisation holder in the follow-up of the reports.
8. Each Arab Country shall ensure that the national authority responsible for medicinal products within that Arab Country is informed of any suspected adverse reaction, brought to the attention of any other authority, body, institution or organisation responsible for patient safety within that Arab Country, and that valid ICSRs are made available to the "National Pharmacovigilance and Safety reports database". Therefore, where reports of suspected adverse reactions are sent directly to other authorities, bodies, organisations and/or institutions within an Arab Country, the national medicines authority in that Arab Country shall have official authorization in place so that these reports are brought to its attention and are made available to "National Pharmacovigilance and Safety reports database" in a timely manner. This applies as well to reports of suspected adverse reactions arising from an error associated with the use of a medicinal product.
9. If there are justifiable grounds resulting from pharmacovigilance activities on the national level, individual Arab Countries may impose additional obligations on marketing authorisation holders for the reporting of suspected adverse reactions in their territory.

VI.C.2.2. Marketing authorisation holders responsibilities

1. Each marketing authorisation holder shall have in place a system for the collection and recording of all reports of suspected adverse reactions which are brought to its attention, whether reported spontaneously by healthcare professionals or consumers or occurring in the context of a post-authorisation study. Marketing authorisation holders shall not refuse to consider reports of suspected adverse reactions received electronically or by any other appropriate means from patients and healthcare professionals. All those reports shall be accessible at a single point.
2. Marketing authorisation holders shall establish mechanisms enabling the traceability and follow-up of adverse reaction reports while complying with the data protection legislation. Pharmacovigilance data and documents relating to individual authorised medicinal products shall be retained as long as the product is authorised and for at least 10 years after the marketing authorisation has ceased to exist. However, the documents shall be retained for a longer period where national law so requires.
3. With regard to the collection and recording of reports of suspected adverse reactions, marketing

authorisation holders responsibilities apply to reports related to medicinal products (see VI.A.2.2) for which ownership cannot be excluded on the basis of one the following criteria: medicinal product name, active substance name, pharmaceutical form, batch number or route of administration. Exclusion based on the primary source country or country of origin of the adverse reaction is possible if the marketing authorisation holder can demonstrate that the suspected medicinal product has never been supplied or placed on the market in that territory or that the product is not a travel medicine.

4. The marketing authorisation holder shall ensure that any information on adverse reactions, suspected to be related to at least one of the active substances of its medicinal products authorised in the Arab Country concerned, is brought to its attention by any company outside this Arab country belonging to the same mother company (or group of companies). The same applies to the marketing authorisation holder when having concluded a commercial agreement with a company outside the Arab Country concerned for one of its medicinal product authorised in this Arab Country. The clock for reporting (see VI.B.7) starts when a valid ICSR is first received by one of these companies outside the Arab Country concerned.

In addition to the requirements presented in this chapter, the general principles detailed in Section VI.B, together with the reporting modalities presented in VI.C.3, VI.C.4 and VI.C.6 should be applied by marketing authorisation holders to all reports of suspected adverse reactions.

VI.C.2.2.1. Spontaneous reports

Marketing authorisation holders shall record all reports of suspected adverse reactions originating from within or outside the Arab Country concerned, which are brought to their attention spontaneously by healthcare professionals, or consumers. This includes reports of suspected adverse reactions received electronically or by any other appropriate means. In this context, marketing authorisation holders may consider utilising their websites (if applicable) to facilitate the collection of reports of suspected adverse reactions by providing adverse reactions forms for reporting, or appropriate contact details for direct communication (See VI.B.1.1.4).

VI.C.2.2.2. Solicited reports

Marketing authorisation holders shall record all reports of suspected adverse reactions originating from within or outside the Arab Country concerned, which occur in post-authorisation studies, initiated, managed, or financed by them[29]. General guidance on post-authorisation studies is provided in VI.C.1.2. Electronic reporting recommendations for cases originating in post-authorisation studies are detailed in VI.C.6.2.3.7.

For post authorisation studies, marketing authorisation holders should have mechanisms in place to collect full and comprehensive case information and to evaluate that information, in order to allow meaningful assessment of individual cases and reporting of valid ICSRs (See VI.B.2) related to the studied (or supplied) medicinal product. Marketing authorisation holders should therefore exercise due diligence in establishing such system, in following-up those reports (See VI.B.3) and in seeking

[29] This does not concern donation of a medicinal product for research purpose if the marketing authorisation holder has no influence on the study.

the view of the primary source as regard the causal role of the studied (or supplied) medicinal product on the notified adverse event. Where this opinion is missing, the marketing authorisation holder should exercise its own judgement based on the information available in order to decide whether the report is a valid ICSR, which should be reported to the national medicines authorities. This does not apply to study designs based on secondary use of data for which reporting of ICSRs is not required (See VI.C.1.2.1).

Safety data to be presented in the relevant sections of the periodic safety update report of the authorised medicinal product are detailed in Module VII.

VI.C.2.2.3. Case reports published in the scientific and medical literature

General principles in relation to the monitoring for individual cases of suspected adverse reactions described in the scientific and medical literature are provided in VI.B.1.1.2. As regards the screening of the scientific and medical literature, the requirements provided in this Module are part of the wider literature searches which need to be conducted for periodic safety update reports (see Module VII).

Marketing authorisation holders should monitor all the active substances for which they hold a marketing authorisation by accessing a widely used systematic literature review and reference database, in line with the principles detailed in VI.B.1.1.2 and in VI. Appendix 2

Articles can be excluded from the reporting of ICSRs by the marketing authorisation holder if another company's branded medicinal product is the suspected medicinal product. In the absence of a specified medicinal product source and/or invented name, ownership of the medicinal product should be assumed for articles about an active substance, unless alternative reasons for exclusion detailed hereafter apply.

- Where ownership of the medicinal product by the marketing authorisation holder can be excluded on the basis of the following criteria: medicinal product name, active substance name, pharmaceutical form, batch number or route of administration;
- For individual case safety reports identified in the scientific and medical literature that originate in a country where a company holds a marketing authorisation but has never commercialised the medicinal product;
- For literature ICSRs which are based on an analysis from a medicines authority database within the Arab Country concerned. The reporting requirements remain for those ICSRs which are based on the analysis from a medicines authority database outside this Arab Country;
- For literature articles, which present data analyses from publicly available databases or, which summarise results from post-authorisation studies (See VI.C.1.2). This type of literature article describes adverse reactions, which occur in a group of patients with a designated medicinal product with the aim of identifying or quantifying a safety hazard related to a medicinal product, and aggregated data on patients are often presented in tables or line listings. The main objective of those studies is to detect/evaluate specific risks that could affect the overall risk-benefit balance of a medicinal product.

New and significant safety findings presented in these articles, for which reporting is not required, should however be discussed in the relevant sections of the concerned periodic safety update report

(see Module VII) and analysed as regards their overall impact on the medicinal product risk-benefit profile. In addition, any new safety information, which may impact on the risk-benefit profile of a medicinal product, should be notified immediately to the medicines authorities in the Arab Countries where the medicinal product is authorised.

A detailed guidance on the monitoring of the scientific and medical literature has been developed; it is included in VI. Appendix 2.

The electronic reporting recommendations regarding suspected adverse reactions reports published in the scientific and medical literature are provided in VI.C.6.2.3.2.

VI.C.2.2.4. Suspected adverse reactions related to quality defect or falsified medicinal products

1. When a report of suspected adverse reactions is associated with a suspected or confirmed falsified medicinal product or quality defect of a medicinal product, a valid ICSR should be reported. The seriousness of the ICSR is linked to the seriousness of the reported suspected adverse reactions in accordance with the definitions provided in VI.A.2.4. Electronic reporting recommendations provided in VI.C.6.2.3.5 should be followed.
2. In addition in order to protect public health, it may become necessary to implement urgent measures such as the recall of one or more defective batch(es) of a medicinal product from the market. Therefore, marketing authorisation holders should have a system in place to ensure that reports of suspected adverse reactions related to falsified medicinal products or to quality defects of a medicinal products are investigated in a timely fashion and that confirmed quality defects are notified separately to the manufacturer and to national medicines authorities.

VI.C.2.2.5. Suspected transmission via a medicinal product of an infectious agent

1. For the purposes of reporting, any suspected transmission of an infectious agent via a medicinal product should be **considered as a serious adverse reaction and such cases should be reported within 15 days** in accordance with the requirements outlined in VI.C.4. If no other criterion is applicable, the seriousness of this ICSR should be considered as important medical event (see VI.A.2.4). This also applies to vaccines.
2. In the case of medicinal products derived from human blood or human plasma, haemovigilance procedures may also apply. Therefore the marketing authorisation holder should have a system in place to communicate suspected transmission via a medicinal product of an infectious agent to the manufacturer, the relevant blood establishment(s) and national medicines authorities in the Arab Countries.

Any organism, virus or infectious particle (e.g. prion protein transmitting Transmissible Spongiform Encephalopathy), pathogenic or non-pathogenic, is considered an infectious agent.

A transmission of an infectious agent may be suspected from clinical signs or symptoms, or laboratory findings indicating an infection in a patient exposed to a medicinal product.

Emphasis should be on the detection of infections/infectious agents known to be potentially transmitted via a medicinal product, but the occurrence of unknown agents should also always be considered.

In the context of evaluating a suspected transmission of an infectious agent via a medicinal product, care should be taken to discriminate, whenever possible, between the cause (e.g., injection/ administration) and the source (e.g., contamination) of the infection and the clinical conditions of the patient at the time of the infection (immuno-suppressed /vaccinee).

Confirmation of contamination (including inadequate inactivation/attenuation of infectious agents as active substances) of the concerned medicinal product increases the evidence for transmission of an infectious agent and may therefore be suggestive of a quality defect for which the procedures detailed in VI.C.2.2.4 should be applied.

VI.C.2.2.6. Emerging safety issues

Events may occur, which do not fall within the definition of reportable valid ICSRs, and thus are not subject to the reporting requirements, even though they may lead to changes in the known risk-benefit balance of a medicinal product and/or impact on public health. Examples include:

- major safety findings from a newly completed non-clinical study;
- major safety concerns identified in the course of a non-interventional post-authorisation study or of a clinical trial;
- signal of a possible teratogen effect or of significant hazard to public health;
- safety issues published in the scientific and medical literature;
- safety issues arising from the signal detection activity (see Module IX) or emerging from a new ICSR and which impact on the risk-benefit balance of the medicinal product and/or have implications for public health;
- safety issues related to the use outside the terms of the marketing authorisation;
- safety issues due to misinformation in the product information;
- marketing authorisation withdrawal, non-renewal, revocation or suspension outside the Arab Country concerned for safety-related reasons;
- urgent safety restrictions outside the Arab Country concerned;
- safety issues in relation to the supply of raw material;
- lack of supply of medicines.

These events/observations, which may affect the risk-benefit balance of a medicinal product, are not to be submitted as ICSRs. They should be notified as Emerging Safety Issues in writing to the national medicines authorities in the Arab Countries where the medicinal product is authorised; this should be done immediately when becoming aware of them. The document should indicate the points of concern and the actions proposed in relation to the marketing application/authorisation for the concerned medicinal product. Those safety issues should also be analysed in the relevant sections of the periodic safety update report of the authorised medicinal product.

VI.C.2.2.7. Period between the submission of the marketing authorisation application and the granting of the marketing authorisation

In the period between the submission of the marketing authorisation application and the granting of

the marketing authorisation, information (quality, non-clinical, clinical) that could impact on the risk-benefit balance of the medicinal product under evaluation may become available to the applicant. It is the responsibility of the applicant to ensure that this information is immediately submitted in accordance with the modalities described in VI.C.2.2.6 to the national medicines authorities in the Arab Countries where the application is under assessment.

VI.C.2.2.8. Period after suspension, revocation or withdrawal of marketing authorisation

The marketing authorisation holder shall continue to collect any reports of suspected adverse reactions related to the concerned medicinal product following the suspension of a marketing authorisation. The reporting requirements outlined in VI.C.4 remain.

Where a marketing authorisation is withdrawn or revoked, the former marketing authorisation holder is encouraged to continue to collect spontaneous reports of suspected adverse reactions originating within the Arab Country concerned to for example facilitate the review of delayed onset adverse reactions or of retrospectively notified cases.

VI.C.2.2.9. Period during a public health emergency

A public health emergency is a public health threat duly recognised either by the World Health Organization (WHO) or the Government. In the event of a public health emergency, regular reporting requirements may be amended. Such arrangements will be considered on a case-by-case basis and will be appropriately notified by the national medicines authority (e.g. on it official website).

VI.C.2.2.10. Reports from patient support programmes and market research programmes

A patient support programme is an organised system where a marketing authorisation holder receives and collects information relating to the use of its medicinal products. Examples are post-authorisation patient support and disease management programmes, surveys of patients and healthcare providers, information gathering on patient compliance, or compensation/re-imbursement schemes.

A market research programme refers to the systematic collection, recording and analysis by a marketing authorisation holder of data and findings about its medicinal products, relevant for marketing and business development.

Safety reports originating from those programmes should be considered **as solicited reports**. Marketing authorisation holders should have the same mechanisms in place as for all other solicited reports (See VI.C.2.2.2) to manage that information and report valid cases of adverse reactions, which are suspected to be related to the concerned medicinal product.

Valid ICSRs should be reported as solicited in accordance with the electronic reporting requirements provided in VI.C.6.2.3.7.

VI.C.3. Reporting time frames

The general rules in relation to the reporting of initial and follow-up reports, including those for defining the clock start are detailed in VI.B.7. Reporting timeframes are as follow:

- serious domestic valid ICSRs shall be reported to medicines authority in the Arab Country concerned by marketing authorisation holders within 15 days from the date of receipt of the reports;
- non-serious domestic valid ICSRs shall be reported to medicines authority in the Arab Country concerned by marketing authorisation holders within 90 days from the date of receipt of the reports.
- reporting of serious international valid ICSRs by MAHs may be required in some Arab Countries; consult with the national medicines authority for national requirements for these ICSRs.

This should be done in accordance with the reporting modalities detailed in VI.C.4.

VI.C.4. Reporting modalities

In addition to the recommendations provided in VI.B.8, national medicines authorities in the Arab Countries and marketing authorisation holders shall use the formats, standards and terminologies for the electronic transmission of suspected adverse reactions. ICSRs shall be used for reporting to the "National Pharmacovigilance and Safety reports database" suspected adverse reactions to a medicinal product that occur in a single patient at a specific point in time. National medicines authorities in Arab Countries and marketing authorisation holders shall also ensure that all reported electronic ICSRs are well documented and as complete as possible.

The time frames for reporting serious and non-serious valid ICSRs are provided in VI.C.3. The recommendations provided in VI.C.6 should be adhered to.

The following reporting requirements shall apply to valid unsolicited and solicited ICSRs reported by healthcare professionals and non-healthcare professionals. This is independently of the condition of use of the suspected medicinal product and of the expectedness of the adverse reaction.

a. Serious ICSRs

- Marketing authorisation holders shall report all serious ICSRs that occur in the Arab Country concerned to the national medicines authority of the Arab Country on whose territory the suspected adverse reactions occurred (i.e. domestic ICSRs).
- **Only in some Arab Countries**; marketing authorisation holders are required to report to national medicines authority of the Arab Country in which the medicinal product is authorised the serious ICSRs that occur outside these Arab Countries (i.e. international serious ICSRs), including those received from medicines authorities. Consult with the national medicines authority for national requirements about international serious ICSRs.
- National medicines authorities in the Arab Countries shall ensure that all serious ICSRs that occur in their territory and that are reported to them, including those received from marketing authorisation holders, are made available to the "National Pharmacovigilance and Safety reports database". National medicines authorities in the Arab Countries should also make available, to the marketing authorisation holders of the suspected medicinal products, all serious ICSRs reported directly to them.

b. Non-Serious ICSRs

- Marketing authorisation holders shall report all non-serious ICSRs that occur in the Arab Countries concerned to the national medicines authority of that Arab Country on whose territory the suspected adverse reactions occurred (i.e. domestic ICSRs).

VI.C.5. Collaboration with the World Health Organization and the National Pharmacovigilance Centres in the Arab Countries

Arab Countries participating in the WHO Programme for International Drug Monitoring shall report to the WHO Collaborating Centre for International Drug Monitoring all suspected adverse reactions reports occurring in their territory. This will take place on a weekly basis after their transmission to the "National Pharmacovigilance and Safety reports database". Another frequency may be adopted by the national pharmacovigilance centre as appropriate.

VI.C.6. Electronic exchange of safety information in the Arab Countries

Part VI.C.6 highlights the requirements to collate and share pharmacovigilance information electronically between national medicines authorities in the Arab Countries and marketing authorisation holders in ways which ensure the quality and integrity of the data collected.

VI.C.6.1. Applicable guidelines, definitions, international formats, standards and terminologies

For the classification, description, retrieval, presentation, risk-benefit evaluation and assessment, electronic exchange and communication of pharmacovigilance and medicinal product information, national medicines authorities and marketing authorisation holders shall apply the hereafter "internationally agreed terminology" and "internationally agreed formats and standards".

Use of internationally agreed terminology

a. ICH M1 terminology - Medical Dictionary for Regulatory Activities (MedDRA);

b. the terminology set out in EN ISO 11615:2012, Health Informatics, Identification of Medicinal Products (IDMP) standard, 'Data elements and structures for unique identification and exchange of regulated medicinal product information' (ISO/FDIS 11615:2012);

c. the terminology set out in EN ISO 11616:2012 Health Informatics, Identification of Medicinal Products (IDMP) standard, 'Data elements and structures for unique identification and exchange of regulated pharmaceutical product information' (ISO/FDIS 11616:2012);

d. the terminology set out in EN ISO 11238:2012 Health Informatics, Identification of Medicinal Products (IDMP) standard, 'Data elements and structures for unique identification and exchange of regulated information on substances' (ISO/FDIS 11238:2012);

e. the terminology set out in EN ISO 11239:2012 Health Informatics, Identification of Medicinal Products (IDMP) standard, 'Data elements and structures for unique identification and exchange of regulated information on pharmaceutical dose forms, units of presentation and

routes of administration' (ISO/FDIS 11239:2012);

f. the terminology set out in EN ISO 11240:2012 Health Informatics, Identification of Medicinal Products (IDMP) standard, 'Data elements and structures for unique identification and exchange of units of measurement' (ISO/FDIS 11240:2012).

Use of internationally agreed formats and standards

1. ICH E2B(R2): Maintenance of the ICH guideline on clinical safety-data management: Data elements for transmission of individual case safety reports. While the implementation of ICH-E2B(R3) is being prepared for, ICH-E2B(R2) remains the currently applicable format for transmission of individual case safety reports;
2. ICH M2 standard 'Electronic Transmission of Individual Case Safety Reports Message Specification'.
3. EN ISO 27953-2:2011 Health Informatics, Individual case safety reports (ICSRs) in pharmacovigilance — Part 2: Human pharmaceutical reporting requirements for ICSR (ISO 27953-2:2011);
4. EN ISO 11615:2012, Health Informatics, Identification of Medicinal Products (IDMP) standard, 'Data elements and structures for unique identification and exchange of regulated medicinal product information' (ISO/FDIS 11615:2012);
5. EN ISO 11616:2012, Health Informatics, Identification of Medicinal Products (IDMP) standard 'Data elements and structures for unique identification and exchange of regulated pharmaceutical product information' (ISO/FDIS 11616:2012);
6. EN ISO 11238:2012, Health Informatics, Identification of Medicinal Products (IDMP) standard, 'Data elements and structures for unique identification and exchange of regulated information on substances' (ISO/FDIS 11238:2012);
7. EN ISO 11239:2012, Health Informatics, Identification of Medicinal Products (IDMP) standard, 'Data elements and structures for unique identification and exchange of regulated information on pharmaceutical dose forms, units of presentation and routes of administration' (ISO/FDIS 11239:2012);
8. EN ISO 11240:2012, Health Informatics, Identification of Medicinal Products (IDMP) standard, 'Data elements and structures for unique identification and exchange of units of measurement' (ISO/FDIS 11240:2012).EN L 159/14 Official Journal of the European Union 20.6.2012

In addition the following guidelines should be applied:

- MedDRA Term Selection: Points to Consider Document - The latest version of the ICH-endorsed Guide for MedDRA Users;
- ICH E2B (R5) Implementation Working Group - Questions & Answers (March 3, 2005);
- The ICH-M5 guideline 'Routes of Administration Controlled Vocabulary' (CHMP/ICH/175860/2005), which provides standard terms for routes of administration;

The latest version of these documents should always be considered.

VI.C.6.2. Electronic Reporting of Individual Case Safety Reports

The reporting of valid ICSRs electronically, by marketing authorisation holders, is mandatory in some Arab Countries for all medicinal products authorised in their territory. Non-adherence to this requirement constitutes a non-compliance with national legislation.

V.I.C.6.2.1. Electronic reporting models

Electronic reporting of valid ICSRs may differ in its required modalities in between the Arab Countries; MAHs shall refer to the national medicines authority in each Arab Country to clarify the national requirements for submitting valid ICSRs. Reporting is classified – in the context of this guideline- to the following:

1. **Full electronic reporting:** the national medicines authority has an electronic regulatory submission environment, Gateway, which follows the ICH M2 Gateway Recommendation for the Electronic Transfer of Regulatory Information (ESTRI-Gateway). To be compatible, the MAH must have a fully ICH E2B (R2) compliant pharmacovigilance system and ICH M2 ESTRI gateway; (i.e. MAH submit the valid ICSRs through ESTRI gateway);
2. **Partial electronic reporting**: fully ICH E2B (R2) compliant pharmacovigilance systems at both the medicines authority and the MAH. The MAH submit the valid ICSRs as an XML file (e.g. through secured email or on CD…etc.; check the national requirements) to the pharmacovigilance department at the national medicines authority who will then import this submitted XML file into the "National Pharmacovigilance and Safety reports database" i.e. no gateway;
3. **Web-based reporting tool**: the national medicines authority provides such tool which has online functions enable the MAH to **generate and submit** a fully ICH E2B and M2 compliant Safety Messages (ICSRs). This is most beneficial for Small and Medium Size Enterprises (SMEs), which do not have the necessary IT in-house tools available (i.e. do not have a fully ICH E2B (R2) compliant pharmacovigilance system and/or ESTRI gateway in place).
4. **None electronic reporting**: MAH submit the valid ICSRs on CIOMs form (whether hard or soft copy);

VI.C.6.2.2. Preparation of Individual Case Safety Reports

VI.C.6.2.2.1. General principles

The content of each valid ICSR transmitted electronically (full or partial) between all stakeholders should comply with the following guidelines detailed in VI.C.6.1.

It is recognised that it is often difficult to obtain all the details on a specific case. However, the complete information (medical and administrative data) for a valid ICSR that is available to the sender should be reported in a structured manner in the relevant ICH-E2B(R2) data elements (which should be repeated as necessary when multiple information is available) and in the narrative section (see VI.C.6.2.2.4). This applies to all types of ICSRs, such as reports with initial information on the case, follow-up information and cases highlighted for nullification (See also VI.C.6.2.2.10 on nullification of individual cases).

In the situation where it is evident that the sender has not transmitted the complete information available on the case, the receiver may request the sender to re-transmit the ICSR within 24 hours with the complete case information in electronic format in accordance with the requirements applicable for the electronic reporting of ICSRs. This should be seen in the light of the qualitative signal detection and evaluation activity, where it is important for the receiver to have all the available information on a case to perform the medical assessment (see VI.C.6.2.4).

Where the suspected adverse reactions reported in a single ICSR impact on the known risk-benefit balance of a medicinal product, this should be considered as an Emerging Safety Issue (see VI.C.2.2.6), which should be immediately notified in writing to the national medicines authorities of the Arab Countries where the medicinal product is authorised. This is in addition to the reporting requirements detailed in VI.C.4. A summary of the points of concerns and the action proposed should be recorded in the ICSR in data element 'Sender's comments' (ICH-E2B (R2) B.5.4).

VI.C.6.2.2.2. Information on suspect, interacting and concomitant medicinal products

The suspect, interacting and/or concomitant active substances/invented names of the reported medicinal products should be provided in accordance with the ICH-E2B (R2) guideline.

The characterisation of medicinal products as suspect, interacting or concomitant is based on the information provided by primary source.

For combination medicinal products, which contain more than one active substance, each active substance needs to be reflected individually in the data element 'Active substance name(s)' (ICH E2B(R2) B.4.k.2.2), which needs to be repeated for each active substance contained in the combination medicinal product.

When the primary source reports a suspect or interacting branded/proprietary medicinal product name without indicating the active substance(s) of the medicinal product and where the proprietary medicinal product can be one of two or more possible generics, which have a different composition depending on the country where the medicinal product is marketed, the ICSR should be populated as follows:

- data element 'Proprietary medicinal product name' (ICH-E2B(R2) B.4.k.2.1) should be populated with the proprietary/branded medicinal product name as reported by the primary source;
- data element 'Active substance name(s)' (ICH-E2B(R2) B.4.k.2.2) should be completed with the active substance(s) that correspond(s) to the composition of the proprietary/branded medicinal product of the country where the reaction/event occurred.

However if the information is available on:

- the 'Identification of the country where the drug was obtained' (data element ICH E2B(R2) B.4.k.2.3),
- the 'Authorization/application number' (data element ICH-E2B(R2) B.4.k.4.1),
- the 'Country of authorization/application' (data element ICH-E2B(R2) B.4.k.4.2), and/or
- the 'Batch/lot number' (data element ICH-E2B(R2) B.4.k.3),

the composition with regard the active substance(s) of the proprietary medicinal product should be provided accordingly.

Where the primary source reports a suspect or interacting branded/proprietary medicinal product name without indicating the pharmaceutical form/presentation of the product and where the proprietary/branded medicinal product can be one of two or more possible pharmaceutical forms/presentations, which have different compositions in a country, the ICSR should be populated as follows:

- data element 'Proprietary medicinal product name' (ICH-E2B(R2) B.4.k.2.1) should be populated with the medicinal product name as reported by the primary source;
- data element 'Active substance name(s)' (ICH-E2B(R2) B.4.k.2.2) should be completed with those active substances which are in common to all pharmaceutical forms/presentations in the country of authorisation.

Where medicinal products cannot be described on the basis of the active substances or the invented names, for example when only the therapeutic class is reported by the primary source, or in case of other administered therapies that cannot be structured, this information should only be reflected in the case narrative (data element ICH-E2B(R2) B.5.1). The data elements ‘Proprietary medicinal product name’ (ICH-E2B(R2) B.4.k.2.1) and ‘Active substance name(s)’ (ICH-E2B(R2) B.4.k.2.2) should not be populated. The same applies if a suspected food interaction is reported (e.g. to grapefruit juice).

Where a case of adverse reactions is reported to be related only to a therapeutic class, it is considered incomplete and does not qualify for reporting (see VI.B.2). Efforts should be made to follow-up the case in order to collect the missing information regarding the suspected medicinal product (see VI.B.3).

As regards the reporting of drug interactions, which concerns drug/drug (including biological products), drug/food, drug/device, and drug/alcohol interactions, the coding of the interaction should be performed in Section ‘Reactions/Events’ (ICH-E2B(R2) B.2) in line with the latest version of the ICH-Endorsed Guide for MedDRA Users - MedDRA Term Selection: Points to Consider Document. In addition, for drug/drug interactions, information on the active substances/proprietary medicinal product names should be provided in the Section ‘Drug information’ (ICH-E2B(R2) B.4), which should be characterised as interacting in the data element ‘Characterisation of drug role’ (ICH-E2B(R2) B.4.k.1).

If the primary source suspects a possible causal role of one of the ingredients (e.g., excipient or adjuvant) of the suspected medicinal product, this information should be provided in the Section ‘Drug information’ (ICH-E2B(R2) B.4) as a separate entry in addition to the information given regarding the suspected medicinal product. This should also be specified in the case narrative (data element ICH-E2B(R2) B.5.1). If available, tests results (positive or negative) in relation to the causal role of the suspected ingredient should be included in the section 'Results of tests and procedures relevant to the investigation of the patient' (ICH E2B(R2) B.3).

VI.C.6.2.2.3. Suspected adverse reactions

All available information shall be provided for each individual case. The coding of diagnoses and

provisional diagnoses with signs and symptoms in the data element 'Reaction/event in MedDRA terminology (Lowest Level Term)' (ICH-E2B(R2) B.2.i.1) should be performed in line with the latest version of the ICH-Endorsed Guide for MedDRA Users, MedDRA Term Selection: Points to Consider.

In practice, if a diagnosis is reported with characteristic signs and symptoms, the preferred option is to select a term for the diagnosis only and to MedDRA code it in the ICH-E2B(R2) section B.2 'Reaction(s)/event(s)'. If no diagnosis is provided, all reported signs and symptoms should be listed and MedDRA coded in the ICH-E2B(R2) section B.2 'Reaction(s)/event(s)'. If these signs and symptoms are typically part of a diagnosis, the diagnosis can be MedDRA coded in addition by medicines authorities in Arab Countries or marketing authorisation holders in the ICH-E2B(R2) data element B.5.3 'Sender's diagnosis/syndrome and/or reclassification of reaction/event'.

If in the narrative other events have been reported, which are not typically signs or symptoms of the primary source's diagnosis or provisional diagnosis, and those events are suspected to be adverse reactions, they should also be listed and MedDRA coded in the ICH-E2B(R2) section B.2 'Reaction(s)/event(s)'.

In case a medicines authority in an Arab Country or a marketing authorisation holder disagrees with the diagnosis reported by the primary source, an alternative diagnosis can be provided in the ICH-E2B(R2) data element B.5.3 'Sender's diagnosis/syndrome and/or reclassification of reaction/event' in addition to the reported diagnosis provided in the ICH-E2B(R2) section B.2 'Reaction(s)/event(s)'. In this situation, a reasoning should be included in the data element 'Sender's comments' (ICH-E2B(R2) B.5.4) (See VI.C.6.2.2.4).

In the event of death of the patient, the date, cause of death including autopsy-determined causes shall be provided as available. If the death is unrelated to the reported suspected adverse reaction(s) and is linked for example to disease progression, the seriousness criterion of the ICSR should not be considered as fatal.

VI.C.6.2.2.4. Case narrative, causality assessment and comments

A case narrative (data element ICH-E2B(R2) B.5.1) shall be provided, where possible[30], for all cases with the exception of non-serious cases. The information shall be presented in a logical time sequence, in the chronology of the patient's experience including clinical course, therapeutic measures, outcome and follow-up information obtained. Any relevant autopsy or post-mortem findings shall also be summarised.

The narrative should be presented in line with the recommendations described in Chapter 5.2 of the ICH-E2D guideline. In this aspect, it should serve as a comprehensive, stand-alone "medical report" containing all known relevant clinical and related information, including patient characteristics, therapy details, medical history, clinical course of the event(s), diagnosis, adverse reactions and their outcomes, relevant laboratory evidence (including normal ranges) and any other information that supports or refutes the suspected adverse reactions. An example of a standard narrative

[30] 'Where possible' should be interpreted as having received sufficient information from the primary source to prepare a concise clinical summary of the individual case.

template is available in the Report of the CIOMS Working Group V[31].

The information provided in the narrative should be consistent with the data appropriately reflected in all the other relevant ICH-E2B(R2) data elements of the ICSR.

Where available, comments from the primary source on the diagnosis, causality assessment or other relevant issue, should be provided in the data element 'Reporter's comments' (ICH-E2B(R2) B.5.2). Medicines authorities in Arab Countries and marketing authorisation holders may provide an assessment of the case and describe a disagreement with, and/or alternatives to the diagnoses given by the primary source (See VI.C.6.2.2.3). This should be done in the data element 'Sender's comments' (ICH-E2B(R2) B.5.4), where discrepancies or confusions in the information notified by the primary source may also be highlighted. Where applicable, a summary of the points of concerns and actions proposed should also be included in the data element 'Sender's comments' (ICH-E2B(R2) B.5.4), if the ICSR leads to notification of an Emerging Safety Issue (see VI.C.2.2.6). The degree of suspected relatedness of each medicinal product to the adverse reaction(s) may be indicated in the data element 'Relatedness of drug to reaction(s)/event(s)' (ICH-E2B(R2) B.4.k.18), which should be repeated as necessary. This also allows presenting the degree of relatedness from different sources or with different methods of assessment.

VI.C.6.2.2.5. Test results

Results of tests and procedures relevant to the investigation of the patient shall be provided.

As described in the ICH-E2B(R2) guideline, the section B.3 'Results of tests and procedures relevant to the investigation of the patient' should capture the tests and procedures performed to diagnose or confirm the reaction/event, including those tests done to investigate (exclude) a non-drug cause, (e.g., serologic tests for infectious hepatitis in suspected drug-induced hepatitis). Both positive and negative results should be reported.

The coding of investigations should be performed in line with the latest version of the ICH-Endorsed Guide for MedDRA Users, MedDRA Term Selection: Points to Consider. If it is not possible to provide information on tests and test results in a structured manner, provisions have been made to allow for the transmission of the information as free text in the data element ICH-E2B(R2) B.3.2. 'Results of tests and procedures relevant to the investigation'.

VI.C.6.2.2.6. Supplementary information

Key information from supplementary records should be provided in the relevant section of the ICSR, and their availability should be mentioned in the data element 'List of documents held by sender' (ICH-E2B(R2) A.1.8.2).

Other known case identifiers relevant for the detection of duplicates should be presented systematically in the data element 'Other case identifiers in previous transmissions' (ICH-E2B(R2) A.1.11).

[31] Council for International Organizations of Medical Sciences (CIOMS). Current Challenges in Pharmacovigilance: Pragmatic Approaches (CIOMS V). Geneva: CIOMS; 2001. http://www.cioms.ch/ .

VI.C.6.2.2.7. Follow-up information

ICSRs are sent at different times to multiple receivers. Therefore the initial/follow-up status is dependent upon the receiver. For this reason an item to capture follow-up status is not included in the ICH-E2B(R2) data elements. However, the data element 'Date of receipt of the most recent information for this report' (ICH-E2B(R2) A.1.7) taken together with the data element 'Sender identifier' (ICH E2B(R2) A.3.1.2) and the data element 'Sender's (case) report unique identifier' (ICH-E2B(R2) A.1.0.1) provide a mechanism for each receiver to identify whether the report being transmitted is an initial or a follow-up report. For this reason these items are considered critical for each transmission and a precise date should always be used (i.e. day, month, year). The data element 'Date of receipt of the most recent information for this report' (ICH-E2B(R2) A.1.7) should therefore always be updated each time a follow-up information is received by a medicines authority or a marketing authorisation holder, independently whether the follow-up information received is significant enough to be reported. The data element 'Date report was first received from the source' (ICH-E2B(R2) A.1.6) should remain unchanged to the date the medicines authority or the marketing authorisation holder became aware of the initial report.

New information should be clearly identifiable in the case narrative (data element ICH-E2B(R2) B.5.1) and provided in a structured format in the applicable ICH-E2B(R2) data elements.

Medicines authorities in Arab Countries or marketing authorisation holders should report follow-up information if significant new medical information has been received. Significant new information relates to for example new suspected adverse reaction(s), a change in the causality assessment and any new or updated information on the case that impacts on its medical interpretation. Therefore, the identification of significant new information requiring to be reported always necessitates medical judgment.

Situations where the seriousness criteria and/or the causality assessment are downgraded (e.g. follow-up information leads to a change of the seriousness criteria from serious to non-serious; causality assessment is changed from related to non-related) should also be considered as significant changes and thus reported (See VI.B.7.1 for reporting time frames).

In addition, medicines authorities in Arab Countries or marketing authorisation holders should also report follow-up information, where new administrative information is available, that could impact on the case management; for example, if new case identifiers have become known to the sender, which may have been used in previous transmissions (data element 'Other case identifiers in previous transmissions' (ICH-E2B(R2) A.1.11)). This information may be specifically relevant to manage potential duplicates. Another example refers to data element 'Additional available documents held by sender' (ICH-E2B(R2) A.1.8), whereby new documents that have become available to the sender may be relevant for the medical assessment of the case.

In contrast, a follow-up report which contains non-significant information does not require to be reported. This may refer, for example, to minor changes to some dates in the case with no implication for the evaluation or transmission of the case, or corrections of typographical errors in the previous case version. Medical judgement should be applied since a change to the birth date may constitute a significant modification (e.g. with implications on the age information of the patient). Similarly, a change of the status of a MedDRA code/term from current to non-current, due to a

version change of MedDRA, can be considered as a non-significant change as long as this change has no impact on the medical content of a case. However, an amendment of the MedDRA coding due to a change in the interpretation of a previously reported suspected adverse reaction may constitute a significant change and therefore should be reported.

In situations where the case is modified without impacting on its medical evaluation, while no new follow-up is received (e.g., for correcting a mistake or typographical error), the date of receipt of the most recent information reported in the data element 'Date of receipt of the most recent information for this report' (ICH-E2B(R2) A.1.7) should not be changed. This data element should however be updated in any other situations, to the date when new follow-up information is received (independently whether it is significant or not) or to the date when changes are made which impact on the interpretation of the case.

Where follow-up information of a case initially reported by a marketing authorisation holder is received directly by a medicines authority, the 'Worldwide unique case identification number' (ICH-E2B(R2) A.1.10) of the initial report should be maintained, in adherence with the ICH-E2B(R2) rules. The same principle should be applied if a follow-up is received by a marketing authorisation holder of a case initially reported by a medicines authority.

VI.C.6.2.2.8. What to take into account for data privacy laws

To detect, assess, understand and prevent adverse reactions and to identify, and take actions to reduce the risks of, and increase the benefits from medicinal products for the purpose of safeguarding public health, the processing of personal data within the "National Pharmacovigilance and Safety reports database"is possible while respecting national legislation in relation to data protection.

VI.C.6.2.2.9. Handling of languages

The ICH-E2B(R2) concept for the electronic reporting of ICSRs is based on the fact that structured and coded information is used for data outputs of pharmacovigilance systems (e.g. listings) and for signal detection. However, for scientific case assessment and signal evaluation, the medical summary provided in the data element 'Case narrative including clinical course, therapeutic measures, outcome and additional relevant information' (ICH-E2B(R2) B.5.1) is normally required (see VI.6.2.2.4).

Where suspected adverse reactions are reported in narrative and textual descriptions in an official language of an Arab Country other than English; for those reports, case translations shall be provided and the original verbatim text and the summary thereof in English shall be provided by the marketing authorisation holder in the "case narrative" field..

Additional documents held by the sender, which may be only available in a local language, should only be translated if requested by the receiver.

VI.C.6.2.2.10. Nullification of cases

In line with the ICH-E2B(R2) guideline, the nullification of individual cases should be used to

indicate that a previously transmitted report should be considered completely void (nullified), for example when the whole case was found to be erroneous or in case of duplicate reports. It is essential to use the same case report numbers previously submitted in the data element 'Sender's (case) safety report unique identifier' (ICH-E2B(R2) A.1.0.1) and in the data element 'Worldwide unique case identification number' (ICH-E2B(R2) A.1.10).

A nullified case is one that should no longer be considered for scientific evaluation. The process of the nullification of a case is by means of a notification by the sender to the receiver that this is no longer a valid case. However, the case should be retained in the sender's pharmacovigilance database for auditing purposes.

The principles to be considered when nullifying a case are detailed in VI. Appendix 3.

VI.C.6.2.3. Special situations

VI.C.6.2.3.1. Use of a medicinal product during pregnancy or breastfeeding

General recommendations are provided in VI.B.6.1.

With regard to the electronic reporting of parent-child/foetus cases, the following should be adhered to:

- In the situation where a foetus or nursing infant is exposed to one or several medicinal products through the parent and experiences one or more suspected adverse reactions (other than early spontaneous abortion/foetal demise), information on both the parent and the child/foetus should be provided in the same report. These cases are referred to as parent-child/foetus reports. The information provided in the section 'Patients characteristics' (ICH-E2B(R2) B.1) applies only to the child/foetus. The characteristics concerning the parent (mother or father), who was the source of exposure to the suspect medicinal product should be provided in the data element 'For a parent-child/fetus report, information concerning the parent' (ICH-E2B(R2) B.1.10). If both parents are the source of the suspect drug(s) then the case should reflect the mother's information in the data element 'For a parent-child/fetus report, information concerning the parent' (ICH E2B(R2) B.1.10). The data element 'Case narrative including clinical course, therapeutic measures, outcome and additional relevant information' (ICH-E2B(R2) B.5.1) should describe the entire case, including the father's information.
- If both the parent and the child/foetus experience suspected adverse reactions, two separate reports, i.e. one for the parent (mother or father) and one for the child/foetus, should be created but they should be linked by using the data element 'Identification number of the report which is linked to this report' (ICH-E2B(R2) A.1.12) in each report.
- If there has been no reaction affecting the child, the parent-child/foetus report does not apply; i.e. the section 'Patients characteristics' (ICH-E2B(R2) B.1) applies only to the parent (mother or father) who experienced the suspected adverse reaction.
- For those cases describing miscarriage or early spontaneous abortion, only a parent report is applicable, i.e. the section 'Patients characteristics' (ICH-E2B(R2) B.1) apply to the mother. However, if the suspect medicinal product was taken by the father, the data element 'Additional information on drug' (ICH-E2B(R2) B.4.k.19) should specify that the medication was taken by

the father.

VI.C.6.2.3.2. Suspected adverse reaction reports published in the scientific and medical literature

Requirements in relation to the monitoring of suspected drug reactions reported in the scientific and medical literature are provided in VI.C.2.2.3. With regard to the electronic reporting of ICSRs published in the scientific and medical literature, the following applies:

- The literature references shall be included in the data element 'Literature reference(s)' (ICH-E2B(R2) A.2.2) in the Vancouver Convention (known as "Vancouver style"), developed by the International Committee of Medical Journal Editors . The standard format as well as those for special situations can be found in the following reference: International Committee of Medical Journal Editors. Uniform requirements for manuscripts submitted to biomedical journals. N Engl J Med. 1997; 336: 309-15, which is in the Vancouver style[32].
- A comprehensive English summary of the article shall be provided in the data element 'Case narrative including clinical course, therapeutic measures, outcome and additional relevant information' (ICH-E2B(R2) B.5.1) .
- Upon request of the national medicines authority, for specific safety review, a full translation in English and a copy of the relevant literature article shall be provided by the marketing authorisation holder that transmitted the initial report, taking into account copyright restrictions. The recommendations detailed in VI.App2.10, regarding the mailing of the literature article, should be adhered to.
- Recommendations presented in VI.App2.10, for the reporting of several cases when they are published in the same literature article, should be followed.

VI.C.6.2.3.3. Suspected adverse reactions related to overdose, abuse, off-label use, misuse, medication error or occupational exposure

General principles are provided in VI.B.6.3.

If a case of overdose, abuse, off-label use, misuse, medication error or occupational exposure is reported with clinical consequences, the MedDRA Lowest Level Term code, corresponding to the term closest to the description of the reported overdose, abuse, off-label use, misuse, medication error or occupational exposure should be added to the observed suspected adverse reaction(s) in the data element 'Reaction/event in MedDRA terminology (Lowest Level Term)' (ICH-E2B(R2) B.2.i.1), in line with recommendations included in the latest version of the ICH-Endorsed Guide for MedDRA Users 'MedDRA Term Selection: Points to Consider'.

VI.C.6.2.3.4. Lack of therapeutic efficacy

General principles are provided in VI.B.6.4.

If the primary source suspects a lack of therapeutic efficacy, the MedDRA Lowest Level Term code, corresponding to the term closest to the description of the reported lack of therapeutic

[32] The Vancouver recommendations are also available on the International Committee of Medical Journal Editors website http://www.icmje.org .

efficacy, should be provided in the data element ‘Reaction/event in MedDRA terminology (Lowest Level Term)’ (ICH-E2B(R2) B.2.i.1), in line with recommendations included in the latest version of the ICH-Endorsed Guide for MedDRA Users 'MedDRA Term Selection: Points to Consider'.

Unless aggravation of the medical condition occurs, the indication for which the suspected medicinal product was administered should not be included in the data element ‘Reaction/event in MedDRA terminology (Lowest Level Term).

The same reporting modalities as for serious ICSRs (See VI.C.4) should be applied for those cases related to classes of medicinal products where, as described in VI.B.6.4, reports of lack of therapeutic efficacy should be reported within a 15-day time frame. If no seriousness criterion is available, it is acceptable to submit the ICSR within 15 days as non-serious.

VI.C.6.2.3.5. Suspected adverse reactions related to quality defect or falsified medicinal products

Requirements are provided in VI.C.2.2.4. In order to be able to clearly identify cases related to quality defect or falsified medicinal products when they are exchanged between stakeholders, the following recommendations should be applied:

a) Quality defect

Where a report of suspected adverse reactions is associated with a suspected or confirmed quality defect of a medicinal product, the MedDRA Lowest Level Term code of the term corresponding most closely to the product quality issue, should be added to the observed suspected adverse reaction(s) in the data element ‘Reaction/event in MedDRA terminology (Lowest Level Term)’ (ICH-E2B(R2) B.2.i.1).

b) Falsified medicinal products

Where a report of suspected adverse reactions is associated with a suspected or confirmed falsified ingredient, active substance or medicinal product, the MedDRA Lowest Level Term code of the term corresponding most closely to the reported information should be added to the observed suspected adverse reaction(s) in the data element ‘Reaction/event in MedDRA terminology (Lowest Level Term)’ (ICH-E2B(R2) B.2.i.1). Information on the suspected medicinal product, active substance(s) or excipient(s) should be provided in the data elements ‘Proprietary medicinal product name’ (ICH-E2B(R2) B.4.k.2.1) and/or ‘Active substance name(s)’ (ICH-E2B(R2) B.4.k.2.2) as reported by the primary source.

VI.C.6.2.3.6. Suspected transmission via a medicinal product of an infectious agent

Requirements are provided in VI.C.2.2.5.

The coding of a suspected transmission of an infectious agent via a medicinal product in the data element 'Reaction/event in MedDRA terminology (Lowest Level Term)' (ICH-E2B(R2) B.2.i.1) should be performed in line with the latest version of the ICH-Endorsed Guide for MedDRA Users 'MedDRA Term Selection: Points to Consider'.

In addition, if the infectious agent is specified, the MedDRA Lowest Level Term code corresponding to the infectious agent should also be included in the data element ‘Reaction/event in MedDRA terminology (Lowest Level Term)’ (ICH-E2B(R2) B.2.i.1).

VI.C.6.2.3.7. Reports originating from organised data collection systems and other systems

General safety reporting requirements in the Arab Countries for post-authorisation studies are provided in VI.C.1 and VI.C.2.2.2. Individual case safety reports originating from those studies shall contain information on study type, study name and the sponsor's study number or study registration number. This should be provided in ICH E2B(R2) section A.2.3 'Study identification'.

Safety reporting requirements regarding patient support programmes or market research programmes are provided in VI.C.2.2.10.

The following reporting rules should be applied based on (i) the type of data collection system and (ii) whether the suspected medicinal product is part of the scope of the data collection system.

1. For all patient support programmes, non-interventional studies with primary data collection from consumers and healthcare professionals, and for certain compassionate use or named patient use where adverse events are actively sought:

a) Where the adverse reaction is suspected to be related at least to the studied (or supplied) medicinal product:

- the report should be considered as solicited;
- the ICH E2B(R2) data element A.1.4 'Type of report' should be populated with the value 'Report from study';
- the ICH E2B(R2) data element A.2.3.3 'Study type in which the reaction(s)/event(s) were observed' should be populated with the value 'Other studies' or 'Individual patient use'.

b) Where the adverse reaction is only suspected to be related to a medicinal product which is not subject to the scope of the organised data collection system and there is no interaction with the studied (or supplied) medicinal product:

- the report should be considered as spontaneous report; as such it conveys the suspicion of the primary source;
- The ICH E2B(R2) data element A.1.4 'Type of report' should be populated with the value 'Spontaneous'.

2. For certain compassionate use or named patient use where adverse event reporting is not solicited:

- the report should be considered as spontaneous report; as such it conveys the suspicion of the primary source;
- The ICH E2B(R2) data element A.1.4 'Type of report' should be populated with the value 'Spontaneous'.

3. For clinical trial and where the adverse reaction is only suspected to be related to a non-investigational medicinal product (or another medicinal product which is not subject to the scope of the clinical trial) and there is no interaction with the investigational medicinal product:

- the report should be considered as spontaneous report; as such it conveys the suspicion

of the primary source;

- The ICH E2B(R2) data element A.1.4 'Type of report' should be populated with the value 'Spontaneous'.

VI.C.6.2.3.8. Receipt of missing minimum information

When missing minimum information (See VI.B.2) has been obtained about a non-valid ICSR, the following rules should be applied:

- the data element 'Date report was first received from source' (ICH-E2B(R2) A.1.6) should contain the date of receipt of the initial non-valid ICSR;
- the data element 'Date of receipt of the most recent information for this report' (ICH-E2B(R2) A.1.7) should contain the date when all the four elements of the minimum information required for reporting have become available;
- clarification should be provided in the case narrative (data element ICH-E2B(R2) B.5.1) that some of the four elements were missing in the initial report;
- as for any reported cases, compliance monitoring is performed against the data element 'Date of receipt of the most recent information for this report' (ICH-E2B(R2) A.1.7).

VI.C.6.2.4. Data quality of individual case safety reports transmitted electronically and duplicate management

The "National Pharmacovigilance and Safety reports database" should contain all domestic cases of suspected adverse reactions to support pharmacovigilance activities. This applies to all medicinal products authorised in the Arab Country concerned.

The "National Pharmacovigilance and Safety reports database" should also be based on the highest internationally recognised data quality standards.

To achieve these objectives, all medicines authorities in Arab Countries and marketing authorisation holders should adhere to:

- the electronic reporting requirements;
- the concepts of data structuring, coding and reporting in line with the guidelines, standards and principles referred to in VI.C.6.2.2.1.

The national medicines authorities shall, in collaboration with the stakeholder that submitted an ICSR to the "National Pharmacovigilance and Safety reports database", be responsible for operating procedures that ensure the highest quality and full integrity of the information collected in this national database. This includes as well the monitoring of use of the terminologies referred to in VI.C.6.1.

In this regard, marketing authorisation holders and national medicines authorities in each Arab Countries should have in place an audit system, which ensures the highest quality of the ICSRs transmitted electronically to the "National Pharmacovigilance and Safety reports database"within the correct time frames, and which enables the detection and management of duplicate ICSRs in their system. Those transmitted ICSRs should be complete, entire and undiminished in their structure, format and content.

High level business process maps and process descriptions in relation to the quality review of ICSRs and the detection and management of duplicate ICSRs are provided in VI. Appendix 4 and VI. Appendix 5.

VI.C.6.2.5. Electronic reporting through company's headquarters

If a pharmaceutical company decides to centralise the electronic reporting of ICSRs (e.g. by reporting through the company's global headquarter), the following should be taken into account:

- the central reporting arrangement should be clearly specified in the marketing authorisation holder's pharmacovigilance system master file and in the internal standard operating procedures;
- the company's headquarter designated for reporting the ICSRs should be notified to the national medicines authority;
-

VI. Appendix 1: Identification of biological medicinal products

Figure VI.2. Business process map - Identification of biological medicinal products

NCA: National Competent Authority (National Medicines Authority)
MAH: Marketing Authorization Holder

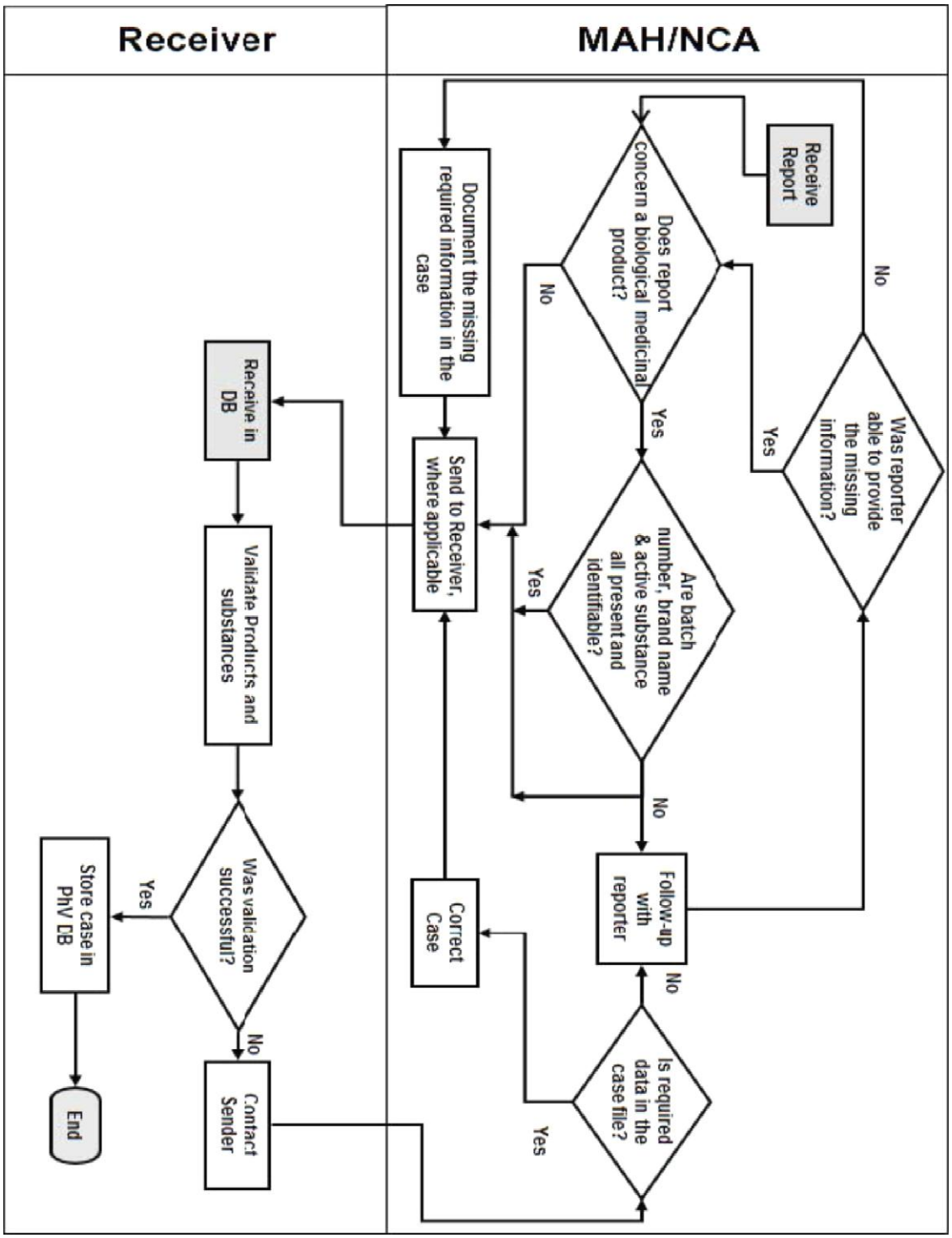

Table VI.1. Process description- Identification of biological medicinal product

No.	Step	Description	Responsible Organisation
1	**Start.** **Receive report.**	**Day 0. Receipt of the information for the case that indicates that one of the suspect drugs is of biological origin.**	**MAH/NCA**
2	Does report concern a biological medicinal product?	If Yes, go to step 3 If No, go to step 4	
3	Are batch number, brand name & active substance all present and identifiable?	If Yes, create the case and send it to the correct receiver (step 3). If there is more than one batch number, structure the batch number that coincided with the adverse reaction in the Drug section (ICH-E2B(R2) B.4) and enter the other batch numbers in the case narrative. If No, create the case and send it to the correct receiver (step 3) and follow-up with the reporter (step 3.1).	MAH/NCA
3.1	Follow-up with reporter.	Follow-up with the reporter to attempt to identify the missing information.	MAH/NCA
3.2	Was reporter able to provide the missing information?	If Yes, return to step 1 – the information should be treated as follow-up and a new version created & transmitted. If No, document this (step 3.3).	MAH/NCA
3.3	Document the required missing information in the case.	Document in the case that the missing required information has been sought but the reporter was not able or willing to provide it.	MAH/NCA
4	Send to receiver, where applicable.	If the case requires transmission to a receiver, transmit the case [if applicable electronically, in E2B(R2) format] within the relevant timelines (15 or 90 days), to the relevant receiver.	MAH/NCA
5	**Receive in DataBase (DB).**	Receive the case electronically and load it into the pharmacovigilance database.	**Receiver**
6	Validate products and substances	Validate the products and substances to ensure that the brand name, active substance & batch number are all present and identifiable. This validation should be complementary to the usual business rules validations.	Receiver
7	Was validation successful?	If Yes, store the case in the pharmacovigilance database (step 8). If No, contact the sender (Step 7.1).	Receiver

No.	Step	Description	Responsible Organisation
7.1	Contact sender.	Contact the sender regarding the missing or not identifiable information.	Receiver
7.2	**Is required data in the case file?**	Upon receipt of communication from the receiver, check in the case file to see if the missing or unidentifiable information is already on file. If it is on file, correct the case (step 7.3). If the information is not on file, contact the reporter to request the missing information (step 3.1).	**MAH/NCA**
7.3	Correct case.	Correct the case to include the missing information & send updated version to receiver (step 4).	MAH/NCA
8	**Store case in PharmacoVigilance DataBase (PhV DB).**	The case should now be stored in the pharmacovigilance database.	**Receiver**
9	**End.**	**The case is now available for signal detection and data quality analyses.**	

VI. Appendix 2: Detailed guidance on the monitoring of scientific and medical literature

VI. App2.1 When to start and stop searching in the scientific and medical literature

Requirements as regards the monitoring of scientific and medical literature are provided in VI.C.2.2.3.

In addition to the reporting of serious and non-serious ICSRs or their presentation in periodic safety update reports, the marketing authorisation holder has an obligation to review the worldwide experience with medicinal product in the period between the submission of the marketing authorisation application and the granting of the marketing authorisation. The worldwide experience includes published scientific and medical literature. For the period between submission and granting of a marketing authorisation, literature searching should be conducted to identify published articles that provide information that could impact on the risk-benefit assessment of the product under evaluation. For the purpose of the preparation of periodic safety update reports (See Module VII) and the notification of Emerging Safety Issues (See VI.C.2.2.6), the requirement for literature searching is not dependent on a product being marketed. Literature searches should be conducted for all products with a marketing authorisation, irrespective of commercial status. It would therefore be expected that literature searching would start on submission of a marketing authorisation application and continue while the authorisation is active.

VI. App2.2 Where to look

Articles relevant to the safety of medicinal products are usually published in well-recognised scientific and medical journals, however, new and important information may be first presented at international symposia or in local journals. Although the most well-known databases (e.g. Medline) cover the majority of scientific and medical journals, the most relevant publications may be collated elsewhere in very specialised medical fields, for certain types of product (e.g. herbal medicinal products) or where safety concerns are subject to non-clinical research. A marketing authorisation holder should establish the most relevant source of published literature for each product.

Medline, Embase and Excerpta Medica are often used for the purpose of identifying ICSRs. These databases have broad medical subject coverage. Other recognised appropriate systems may be used. The database providers can advise on the sources of records, the currency of the data, and the nature of database inclusions. It is best practice to have selected one or more databases appropriate to a specific product. For example, in risk-benefit assessment, safety issues arising during non-clinical safety studies may necessitate regular review of a database that has a less clinical focus and includes more laboratory-based publications.

Relevant published abstracts from meetings and draft manuscripts should be reviewed for reportable ICSRs and for inclusion in periodic safety update reports. Although it is not a requirement for marketing authorisation holders to attend all such meetings, if there are company

personnel at such a meeting, or it is sponsored by a marketing authorisation holder, it is expected that articles of relevance would be available to the marketing authorisation holder's pharmacovigilance system. In addition, literature that is produced or sponsored by a marketing authorisation holder should be reviewed, so that any reportable ICSRs can be reported as required in advance of publication.

If ICSRs are brought to the attention of a marketing authorisation holder from this source, they should be processed in the same way as ICSRs found on searching a database or reviewing a journal.

Abstracts from major scientific meetings are indexed and available in some databases, but posters and communications are rarely available from this source.

VI. App2.3 Database Searches

A search is more than a collection of terms used to interrogate a database. Decisions about the database selection, approach to records retrieval, term or text selection and the application of limits need to be relevant to the purpose of the search. For searches in pharmacovigilance, some of the considerations for database searching are described below.

VI. App2.3.1 Precision and recall

Medical and scientific databases are a collection of records relating to a set of publications. For any given record, each database has a structure that facilitates the organisation of records and searching by various means, from simple text to complex indexing terms with associated subheadings. Search terms (text or indexed) can be linked using Boolean operators and proximity codes to combine concepts, increasing or decreasing the specificity of a search. In addition, limits to the output can be set. When searching, the application of search terms means that the output is less than the entire database of the records held. The success of a search can be measured according to precision and recall (also called sensitivity). Recall is the proportion of records retrieved ("hits") when considering the total number of relevant records that are present in the database. Precision is the proportion of "hits" that are relevant when considering the number of records that were retrieved. In general, the higher recall searches would result in low precision.

VI. App2.3.2 Search construction

Databases vary in structure, lag time in indexing and indexing policy for new terms. While some database providers give information about the history of a particular indexing term or the application of synonyms, other databases are less sophisticated. In addition, author abstracts are not always consistent in the choice of words relating to pharmacovigilance concepts or medicinal products/active substances names.

When constructing a search for pharmacovigilance, the highest recall for a search would be to enter the medicinal product name and active substance name (in all their variants) only. In practice, additional indexing terms and text are added to increase precision and to reduce the search result to return records that are of relevance to pharmacovigilance. There is a balance to be achieved. It is, therefore, expected that complicated searches are accompanied by initial testing to check that

relevant records are not omitted, however, there is no defined acceptable loss of recall when searching for pharmacovigilance purposes. Term selection should be relevant to the database used and the subject of the search.

VI. App2.3.3 Selection of product terms

Searches should be performed to find records for active substances and not for brand names only. This can also include excipients or adjuvants that may have a pharmacological effect. When choosing search terms for medicinal products, there are a number of considerations.

- Is the active substance an indexed term?
- What spellings might be used by authors (particularly if the active substance is not indexed)?
- What alternative names might apply (numbers or codes used for products newly developed, chemical names, brand names, active metabolites)?
- Is it medically relevant to search only for a particular salt or specific compound for an active substance?

During searches for ICSRs, it may be possible to construct a search that excludes records for pharmaceutical forms or routes of administration different to that of the subject product, however, restrictions should allow for the inclusion of articles where this is not specified. Search construction should also allow for the retrieval of overdose, medication error, abuse, misuse, off-label use or occupational exposure information, which could be poorly indexed. Searches should also not routinely exclude records of unbranded products or records for other company brands.

VI. App2.3.4 Selection of search terms

As described previously, there is no acceptable loss of recall when searching published literature for pharmacovigilance. The use of search terms (free text or use of indexing) to construct more precise searches may assist in managing the output. Deficiencies that have been found frequently during Competent Authority inspections include:

- the omission of outcome terms, for example "death" as an outcome may be the only indexed term in a case of sudden death;
- the omission of pregnancy terms to find adverse outcomes in pregnancy for ICSR reporting;
- the omission of terms to include special types of reports which needs to be addressed as well in periodic safety update reports, for example,
  - Reports of asymptomatic overdose, medication error, off-label use, misuse, abuse, occupational exposure;
  - Reports of uneventful pregnancy.

VI. App2.3.5 Limits to a search

Some databases apply indexing that allows the application of limits to a search, for example by subject age, sex, publication type. The limits applied to a search are not always shown in the "search strategy" or search string.

If limits are applied, they should be relevant to the purpose of the search. When searching a worldwide scientific and medical literature database, titles and abstracts are usually in English language. The use of limits that reduce the search result to only those published in the English language is generally not acceptable. Limits applied to patient types, or other aspects of an article, for example human, would need to be justified in the context of the purpose of a search.

Limits can be applied to produce results for date ranges, for example, weekly searches can be obtained by specifying the start and end date for the records to be retrieved. Care should be taken to ensure that the search is inclusive for an entire time period, for example, records that may have been added later in the day for the day of the search should be covered in the next search period. The search should also retrieve all records added in that period, and not just those initially entered or published during the specified period (so that records that have been updated or retrospectively added are retrieved). This should be checked with the database provider if it is not clear.

Although one of the purposes of searching is to identify ICSRs for reporting, the use of publication type limits is not robust. ICSRs may be presented within review or study publications, and such records may not be indexed as "case-reports", resulting in their omission for preparation of periodic safety update reports from search results limited by publication type.

VI. App2.4 Record keeping

Records of literature searches shall be maintained. Marketing authorisation holders should demonstrate due diligence in searching published scientific and medical literature. It is always good practice to retain a record of the search construction, the database used and the date the search was run. In addition, it may be useful to retain results of the search for an appropriate period of time, particularly in the event of zero results. If decision making is documented on the results, it is particularly important to retain this information.

VI. App2.5 Outputs

Databases can show search results in different ways, for example, titles only or title and abstract with or without indexing terms. Some publications are of obvious relevance at first glance, whereas others may be more difficult to identify. Consistent with the requirement to provide the full citation for an article and to identify relevant publications, the title, citation and abstract (if available) should always be retrieved and reviewed.

VI. App2.6 Review and selection of articles

It is recognised that literature search results are a surrogate for the actual article. Therefore, it is expected that the person reviewing the results of a search is trained to identify the articles of relevance. This may be an information professional trained in pharmacovigilance or a pharmacovigilance professional with knowledge of the database used. Recorded confirmation that the search results have been reviewed will assist in demonstrating that there is a systematic approach to collecting information about suspected adverse reactions from literature sources. It is recommended that quality control checks are performed on a sample of literature reviews / selection of articles to check the primary reviewer is identifying the relevant articles.

A common issue in selecting relevant articles from the results of a search is that often this process is conducted for the purposes of identification of ICSRs only. Whereas the review should also be used as the basis for collating articles for the periodic safety update report production, therefore relevant studies with no ICSRs should also be identified, as well as those reports of events that do not qualify for reporting.

Outputs from searches may contain enough information to be a valid ICSR, in which case the article should be ordered. All articles for search results that are likely to be relevant to pharmacovigilance requirements should be obtained, as they may contain valid ICSRs or relevant safety information. The urgency with which this occurs should be proportionate to the content of the material reviewed and the resulting requirement for action as applicable for the marketing authorisation holder.

Articles can be excluded from reporting by the marketing authorisation holder if another company's branded medicinal product is the suspected medicinal product. In the absence of a specified medicinal product source and/or invented name, ownership of the medicinal product should be assumed for articles about an active substance. Alternative reasons for the exclusion of a published article for the reporting of ICSRs are detailed in VI.C.2.2.3.

VI. App2.7 Day zero

As described in VI.B.7, day zero is the date on which an organisation becomes aware of a publication containing the minimum information for an ICSR to be reportable. Awareness of a publication includes any personnel of that organisation, or third parties with contractual arrangements with the organisation. It is sometimes possible to identify the date on which a record was available on a database, although with weekly literature searching, day zero for a reportable adverse reaction present in an abstract is taken to be the date on which the search was conducted. For articles that have been ordered as a result of literature search results, day zero is the date when the minimum information for an ICSR to be valid is available. Organisations should take appropriate measures to obtain articles promptly in order to confirm the validity of a case.

VI. App2.8 Duplicates

Consistent with the requirements for reporting ICSRs, literature cases should be checked to prevent reporting of duplicates, and previously reported cases should be identified as such when reported. It is, therefore, expected that ICSRs are checked in the organisation database to identify literature articles that have already been reported.

VI. App2.9 Contracting out Literature Search Services

It is possible to use the services of another party to conduct searches of the published scientific and medical literature. In this event, the responsibility for the performance of the search and subsequent reporting still remains. The transfer of a pharmacovigilance task or function should be detailed in a contract between the organisation and the service provider. The nature of third party arrangements for literature searching can range from access to a particular database interface only (access to a technology) to full literature searching, review and reporting (using the professional pharmacovigilance services of another organisation). It is recognised that more than one

organisation may share services of a third party to conduct searches for generic active substances. In this instance, each organisation should satisfy itself that the search and service is appropriate to their needs and obligations.

Where an organisation is dependent on a particular service provider for literature searching, it is expected that an assessment of the service(s) is undertaken to determine whether it meets the needs and obligations of the organisation. In any case, the arrangement should be clearly documented.

The clock start for the reporting of ICSRs begins with awareness of the minimum information by either the organisation or the contractual partner (whichever is the earliest). This also applies where a third party provides a review or a collated report from the published scientific and medical literature, in order to ensure that published literature cases are reported as required within the correct time frames. That is, day zero is the date the search was run if the minimum criteria are available in the abstract and not the date the information was supplied to the organisation.

VI. App2.10 Submission of copies of articles published in the scientific and medical literature

Electronic transmission of attachments (e.g. copies of literature articles) may be required in some Arab Countries; consult with the national medicines authorities for national requirement .Other Arab Countries in which electronic submission is not required the sender should follow the rules outlined below for the submission of a copy of the literature article as detailed in VI.C.6.2.3.2:

1. Mailing address and format of literature articles:

   Literature articles reportable to the national medicines authorities should be provided in PDF format and sent via e-mail (consult with the national medicines authorities for specified email).

   In relation to copies of articles from the published scientific and medical literature, marketing authorisation holders are recommended to consider potential copyright issues specifically as regards the electronic transmission and handling of electronic copies in the frame of regulatory activities.

2. File name of literature articles sent to the national medicines authorities:

   The file name of a literature article sent in PDF format should match exactly the ‘World-Wide Unique Case Identification Number’ (ICH-E2B(R2) A.1.10.1 or A.1.10.2 as applicable) assigned to the individual case, which is described in the article and which is reported in the E2B(R2) ICSR format.

   If there is a follow-up article to the individual case published in the literature, the file name with the World-Wide Unique Case Identification Number must be maintained but should include a sequence number separated with a dash.

   Examples:

- Initial ICSR published in the literature: FR-ORGABC-23232321 (data element ‘World-Wide Unique Case Identification Number’ (ICH-E2B(R2) A.1.10.1));
  - File name of the literature article: FR-ORGABC-23232321.pdf.

- Follow-up information published in the literature in a separate article:
  - ICSR: FR-ORGABC-23232321 (data element World-Wide Unique Case Identification Number remains unchanged (ICH-E2B(R2) A.1.10.1));
  - File name: FR-ORGABC-23232321-1.pdf.

3. Reporting of cases reported in the scientific and medical literature referring to more than one patient:

   When the literature article refers to the description of more than one patient, the copy of the literature article should be sent only once.

   The file name of a literature article sent in PDF format should match exactly the 'World-Wide Unique Case Identification Number' (data element ICH-E2B(R2) A.1.10.1 or A.1.10.2 as applicable) assigned to the first reportable individual case described in the article.

   In addition, all ICSRs which relate to the same literature article should be cross referenced in the data element 'Identification number of the report which is linked to this report' (ICH-E2B(R2) A.1.12). The data element should be repeated as necessary to cross refer all related cases (see Table VI.2).

Table VI.2. Examples for the reporting of ICSRs described in the scientific and medical literature and referring to more than one patient

Ex	Scenario	Action
1	A literature article describes suspected adverse reactions that have been experienced by up to 3 single patients. 3 ICSRs should be created and reported for each individual identifiable patient described in the literature article. Each ICSR should contain all the available information on the case.	**For Case 1 described in the literature article:** ▪ ICH-E2B(R2) A.1.10.1 'World-Wide Unique Case Identification Number': UK-ORGABC-0001 ▪ ICH-E2B(R2) A.1.12 'Identification number of the report which is linked to this report': UK-ORGABC-0002 ▪ ICH-E2B(R2) A.1.12 'Identification number of the report which is linked to this report': UK-ORGABC-0003 ▪ ICH-E2B(R2) A.2.2 'Literature reference(s): Literature reference in line with uniform requirements for manuscripts submitted to biomedical journals: N Engl J Med. 1997;336:309-15. ▪ File name for the copy of literature article to be sent via e-mail: UK-ORGABC-0001.pdf **For Case 2 described in the literature article:** ▪ ICH-E2B(R2) A.1.10.1 'World-Wide Unique Case Identification Number': UK-ORGABC-0002

Ex	Scenario	Action
		▪ ICH-E2B(R2) A.1.12 'Identification number of the report which is linked to this report': UK-ORGABC-0001 ▪ ICH-E2B(R2) A.1.12 'Identification number of the report which is linked to this report': UK-ORGABC-0003 ▪ ICH-E2B(R2) A.2.2 'Literature reference(s): Literature reference in line with uniform requirements for manuscripts submitted to biomedical journals: N Engl J Med. 1997;336:309-15. ▪ No copy of the literature article required since the copy was already submitted for case 1. **For Case 3 described in the literature article:** ▪ ICH-E2B(R2) A.1.10.1 'World-Wide Unique Case Identification Number': UK-ORGABC-0003 ▪ ICH-E2B(R2) A.1.12 'Identification number of the report which is linked to this report': UK-ORGABC-0001 ▪ ICH-E2B(R2) A.1.12 'Identification number of the report which is linked to this report': UK-ORGABC-0002 ▪ ICH-E2B(R2) A.2.2 'Literature reference(s): Literature reference in line with uniform requirements for manuscripts submitted to biomedical journals: N Engl J Med. 1997;336:309-15. ▪ No copy of the literature article required since the copy was already submitted for case 1.
2	A literature article describes suspected adverse reactions that have been experienced by more than 3 single patients. ICSRs should be created and reported for each individual identifiable patient described in the literature article.	For the ICSRs which relate to the same literature article, the cross reference in the data element 'Identification number of the report which is linked to this report' ICH (E2B(R2) field A.1.12) should be conducted as follows: ▪ The first case should be linked to all other cases related to the same article; ▪ All the other cases should be only linked to the first one, as in the example below. *Example for the reporting of cases originally reported in the scientific and medical literature referring to a large number of patients:*

Ex	Scenario	Action
	Each ICSR should contain all the available information on the case. The cross reference with all the linked ICSRs from this literature article should only be provided in the first case, in the data element ICH-E2B(R2) A.1.12 'Identification number of the report which is linked to this report'. There is no need to repeat all the cross references in the other ICSRs.	**For Case 1 described in the literature article:** ▪ ICH E2B(R2) A.1.10.1 'Worldwide Unique Case Identification Number': UK-ORGABC-0001 ▪ ICH-E2B(R2) A.1.12 'Identification number of the report which is linked to this report': UK-ORGABC-0002 ▪ ICH-E2B(R2) A.1.12 'Identification number of the report which is linked to this report': UK-ORGABC-0003 ▪ ICH-E2B(R2) A.1.12 'Identification number of the report which is linked to this report': UK-ORGABC-0004 ▪ ICH-E2B(R2) A.1.12 'Identification number of the report which is linked to this report': UK-ORGABC-000N ▪ ICH-E2B(R2) A.2.2 'Literature reference(s)': N Engl J Med. 1997;336:309-15. ▪ File name for the copy of literature article to be sent via e-mail: UK-ORGABC-0001.pdf. **For Case 2 described in the literature article:** ▪ ICH E2B(R2) A.1.10.1 'Worldwide Unique Case Identification Number': UK-ORGABC-0002 ▪ ICH-E2B(R2) A.1.12 'Identification number of the report which is linked to this report': UK-ORGABC-0001 ▪ ICH-E2B(R2) A.2.2 'Literature reference(s)': N Engl J Med. 1997;336:309-15. ▪ No copy of the literature article required since the copy was already submitted for case 1. **For Case N described in the literature article:** ▪ ICH-E2B(R2) A.1.10.1 'Worldwide Unique Case Identification Number': UK-ORGABC-000N ▪ ICH-E2B(R2) A.1.12 'Identification number of the report which is linked to this report': UK-ORGABC-0001

Ex	Scenario	Action
		▪ ICH-E2B(R2) A.2.2 'Literature reference(s)': N Engl J Med. 1997;336:309-15. ▪ No copy of the literature article required since the copy was already submitted for case 1

VI. Appendix 3: Nullification of cases

General principles regarding the nullification of cases are provided in VI.C.6.2.2.10. The following recommendations should also be applied:

- The value in the data element 'Report nullification' (ICH-E2B(R2) A.1.13) should be set to 'Yes' and the nullification reason should be provided in the data element 'Reason for nullification' (ICH-EB(R2) A.1.13.1). The nullification reason should be clear and concise to explain why this case is no longer considered to be a valid report. For example a nullification reason stating, 'the report no longer meets the reporting criteria' or 'report sent previously in error' are not detailed enough explanations.
- Once an individual case has been nullified, the case cannot be reactivated.
- If it becomes necessary to resubmit the case that has been previously nullified, a new 'Sender's (case) safety report unique identifier' (ICH-E2B(R2) A.1.0.1) and 'Worldwide unique case identification number' (ICH-E2B(R2) A.1.10) should be assigned.
- Individual versions (i.e. follow-up reports) of a case cannot be nullified, only the entire individual case to which they refer.

Table VI.3. Examples of scenarios for which ICSRs should be nullified

Ex.	Scenario	Action
1	An individual case has been identified as a duplicate of another individual case previously submitted.	One of the individual cases should be nullified. The remaining valid case should be updated with any additional relevant information from the nullified case.
2	A wrong 'Worldwide unique case identification number' (ICH-E2B(R2) A.1.10) was accidentally used and does not refer to an existing case.	The case with the wrong 'Worldwide unique case identification number' (ICH-E2B(R2) A.1.10) should be nullified. A new case should be created with a correct 'Worldwide unique case identification number'.
3	On receipt of further information it is confirmed that the adverse reaction occurred before the suspect drug(s) was taken.	The case should be nullified.
4	On receipt of further information on an individual case, it is confirmed that the patient did not receive the suspect drug. Minimum reporting criteria for an ICSR as outlined in VI.B.2 are no longer met.	The case should be nullified.

Ex.	Scenario	Action
5	On receipt of further information it is confirmed by the same reporter that the reported adverse reaction(s) did not occur to the patient. Minimum reporting criteria for an ICSR as outlined in VI.B.2are no longer met.	The case should be nullified.
6	On receipt of further information it is confirmed that there was no valid patient for the individual case. Minimum reporting criteria for an ICSR as outlined in VI.B.2 are no longer met.	If it is not possible to obtain confirmation of the patient's existence, then the case should be nullified.

- Individual cases that have been nullified should not be used for scientific evaluation, however, they should remain in the database for auditing purposes.
- In addition, in case of duplicate reports where one report needs to be nullified, the update of the remaining case should be performed in the form of a follow-up report. Information on the identification of the nullified case(s) should be provided in the data element 'Source(s) of the case identifier (e.g. name of the company, name of regulatory agency)' (ICH-E2B(R2) A.1.11.1) and in the data element 'Case identifier(s)' (ICH-E2B(R2) A.1.11.2).

Table VI.4. Examples of scenarios for which ICSRs should **NOT** be nullified

Ex.	Scenario	Action
7	A wrong 'Worldwide unique case identification number' (ICH E2B(R2) A.1.10) was accidentally used. This wrong ICH-E2B(R2) A.1.10 'Worldwide unique case identification number' referred to an existing case.	The report with the wrong 'Worldwide unique case identification number' (ICH-E2B(R2) A.1.10) should not be nullified. A follow-up report should be submitted to correct the information previously submitted. A new ICSR should be created and submitted with the correct 'Worldwide unique case identification number'.
8	On receipt of further information on an individual case, it is confirmed that the patient did not receive the marketing authorisation holder's suspect drug. However, the patient received other suspect drugs and the minimum reporting criteria for an ICSR are still met.	The case should not be nullified.

Ex.	Scenario	Action
9	On receipt of further information the reporter has confirmed that the reported adverse reaction is no longer considered to be related to the suspect medicinal product(s).	The case should not be nullified. A follow-up report should be submitted within the appropriate time frame with the updated information on the case.
10	Change of the individual case from serious to non-serious (downgrading).	The case should not be nullified. A follow-up report should be submitted with the data element 'Seriousness' (ICH-E2B(R2) A.1.5.1) populated with the value 'No' without selection of a value for the data element 'Seriousness criteria' (ICH-E2B(R2) A.1.5.2). The data element 'Does this case fulfil the local criteria for an expedited report?' (ICH-E2B(R2) field A.1.9) should remain populated with the value 'Yes'.
11	The primary source country has changed, which has an impact on the ICH-E2B(R2) convention regarding the creation of the 'Worldwide unique case identification number' (ICH-E2B(R2) A.1.10).	The case should not be nullified. The 'Sender's (case) safety report unique identifier' (ICH-E2B(R2) A.1.0.1) can be updated on the basis of the new primary source country code. However, the 'Worldwide unique case identification number' (ICH-E2B(R2) A.1.10) should remain unchanged. If, for some technical reason, the sender's local system is not fully ICH-E2B(R2) compliant and cannot follow this policy, then the sender should nullify the original case. A new case should be created with a new 'Worldwide unique case identification number' (ICH-E2B(R2) A.1.10) reflecting the changed primary source country code. The 'Worldwide unique case identification number' (ICH-E2B(R2) A.1.10) of the case that was nullified should be reflected in the data elements 'Other case identifiers in previous transmissions' (ICH-E2B(R2) A.1.11).
12	The suspected medicinal product belongs to another marketing authorisation holder (e.g. a product with the same active substance but marketed under a different invented name).	The case should not be nullified. It is recommended that the initial sender informs the other marketing authorisation holder about this case (including the 'Worldwide unique case identification number' (ICH-E2B(R2) A.1.10) used). The original organisation should also submit a follow-up report to provide this new information. The other concerned marketing authorisation holder

Ex.	Scenario	Action
		should create a new case and specify the reference case number and the name of the initial sending marketing authorisation holder in the data elements 'Source(s) of the case identifier (e.g. name of the company name of regulatory agency)' (ICH-E2B(R2) A.1.11.1) and 'Case identifier(s)' (ICH-E2B(R2) A.1.11.2). This will allow grouping the cases in the Pharmacovigilance database.
13	The suspected medicinal product taken does not belong to the marketing authorisation holder (same active substance, the invented name is unknown and the report originates from a country, where the marketing authorisation holder has no marketing authorisation for the medicinal product in question).	The case should not be nullified. The marketing authorisation holder should submit a follow-up report with this information within the appropriate time frame.
14	The case is mistakenly reported by the marketing authorisation holder A although the marketing authorisation holder B as co-marketer is responsible for reporting the case.	The case should not be nullified. An explanation should be sent by the marketing authorisation holder A to the co-marketer marketing authorisation holder B that the case has already been reported. The marketing authorisation holder B should provide any additional information on the case as a follow-up report with the same 'Worldwide unique case identification number' (ICH-E2B(R2) A.1.10).

VI. Appendix 4: Data quality monitoring of ICSRs transmitted electronically

Figure VI. 3. Business process map - Data quality monitoring of ICSRs transmitted electronically

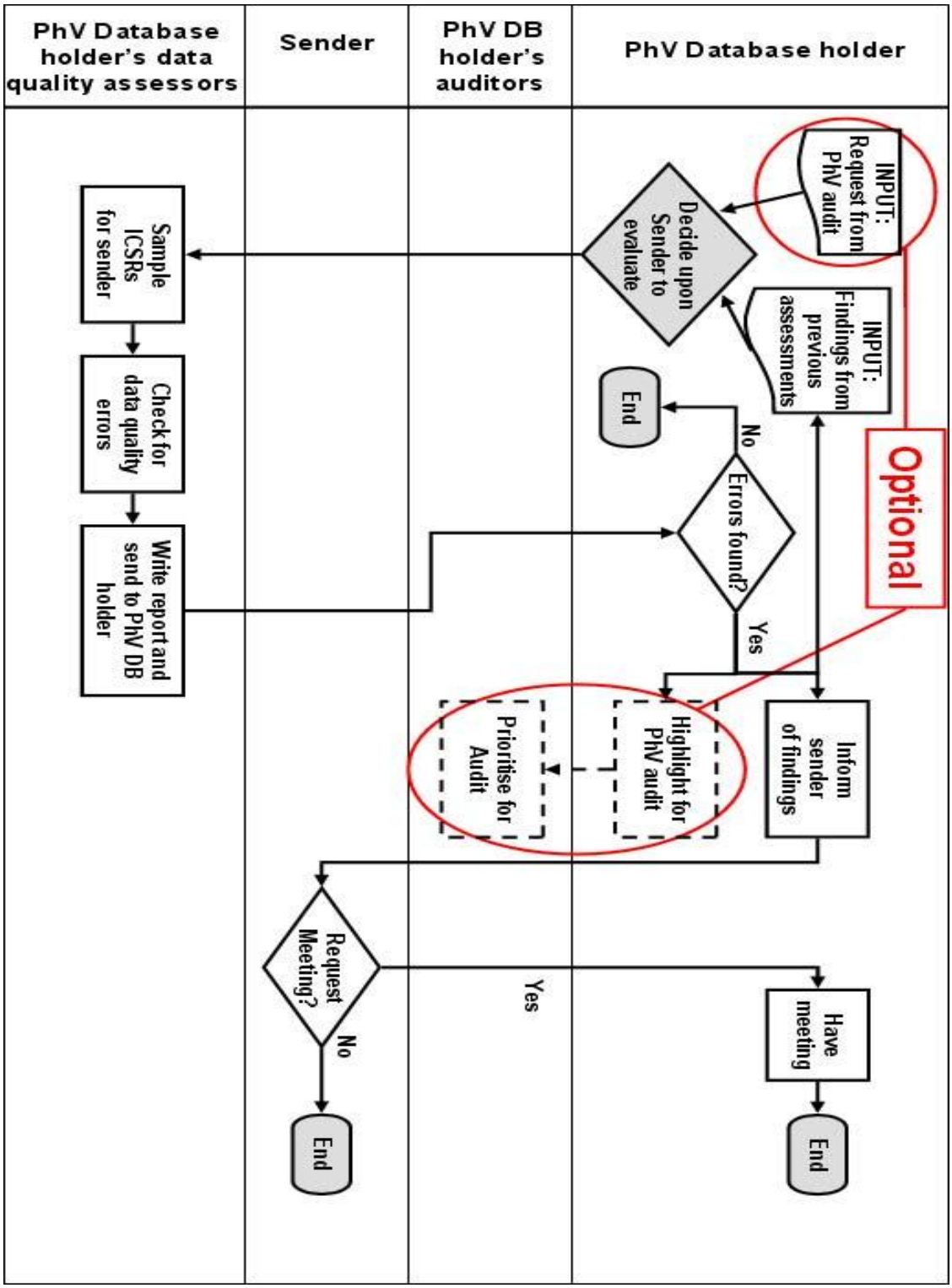

Table VI.5. Process description - Data quality monitoring of ICSRs transmitted electronically

The business map and process description describe a system where there is a separation between a PharmacoVigilance DataBase (PhV DB) holder, the PhV DB holder's data Quality Assessors (QA) and the PhV DB holder's auditors; however this is not mandatory and these functions may be performed by the same people or groups.

No.	Step	Description	Responsible Organisation
1	**Start.** **Decide upon Sender to evaluate.**	**Select one of the organisations that has transmitted ICSRs to your database.** **Inputs into this decision can include, but need not be limited to findings from previous assessments and requests from pharmacovigilance audits.**	**PhV DB holder**
2	**Sample ICSRs from Sender.**	Take a sample of ICSRs that were transmitted by the selected sender	**QA**
3	Check for data quality errors.	Check the cases for data quality errors. The cases should be assessed against appropriate published standards and similar documents, for example the MedDRA Term Selection Points to Consider document.	QA
4	Write report and send to PhV DB holder.	The findings from the data quality assessment should be collated into a single report. These can include related checks, such as 15-day reporting compliance, whether error reports are corrected and similar statistical information.	QA
5	**Errors found?**	Were any errors found during the analysis of the cases? If No, go to step 5.1. If Yes go to steps 5.2, 5.3 & 6.	**PhV DB holder**
5.1	**End.**	**If there were no errors found, then no further action needs to be taken. The process can end until the next time the sender is assessed.** **The pharmacovigilance database (PhV DB) holder may choose to share this information with the assessed sender and their auditors who may wish to factor this in to determinations of which sender to assess.**	**PhV DB holder**
5.2	Highlight for PhV audit.	If the PhV DB holder's organisation has an audit department, any significant findings should always be shared with them.	PhV DB holder

No.	Step	Description	Responsible Organisation
5.2.1	**Prioritise for Audit.**	The audit or inspections department should use the information provided to them to feed into decisions about prioritising organisations for audit or inspection.	**PhV DB holder's auditors**
5.3	**INPUT: Findings from previous assessments.**	Any errors found (or even lack thereof) should be incorporated into decisions about which senders to evaluate & should also inform the performance of the assessments (e.g. targeting particular types of case) and the report (documenting whether previously identified issues have been addressed).	**PhV DB holder**
6	Inform sender of findings.	Inform the sender of the findings, including requested remedial actions (e.g. retransmitting certain cases) and time frames for those actions	PhV DB holder
7	**Request meeting?**	The sender should have the option to choose to request a meeting to discuss the findings and appropriate remedial action and time frames. If no meeting is requested, go to step 7.1. If a meeting is requested go to step 8.	**Sender**
7.1	Address the findings & retransmit any required cases.	Address all findings, take necessary steps to prevent recurrence of such findings & retransmit any required cases.	Sender
7.2	**End.**	**Once all findings have been addressed, the necessary steps taken to prevent recurrence of such findings and any required cases have been retransmitted, the process can end until the next time the sender is assessed.**	**Sender**
8	**Have meeting.**	Upon request from one party, a meeting should be held to discuss the findings of quality assessments and appropriate remedial and preventive actions to ensure that the cases in the database are correct and shall be so in the future.	**PhV DB holder & Sender**
9	**End.**	**Unless further action has been specified (e.g. future meetings or assessments), the process can end until the next time the sender is assessed.**	**PhV DB holder**

VI. Appendix 5: Duplicate detection and management of ICSRs

Figure VI.4. Business process map - Duplicate detection and management of ICSRs

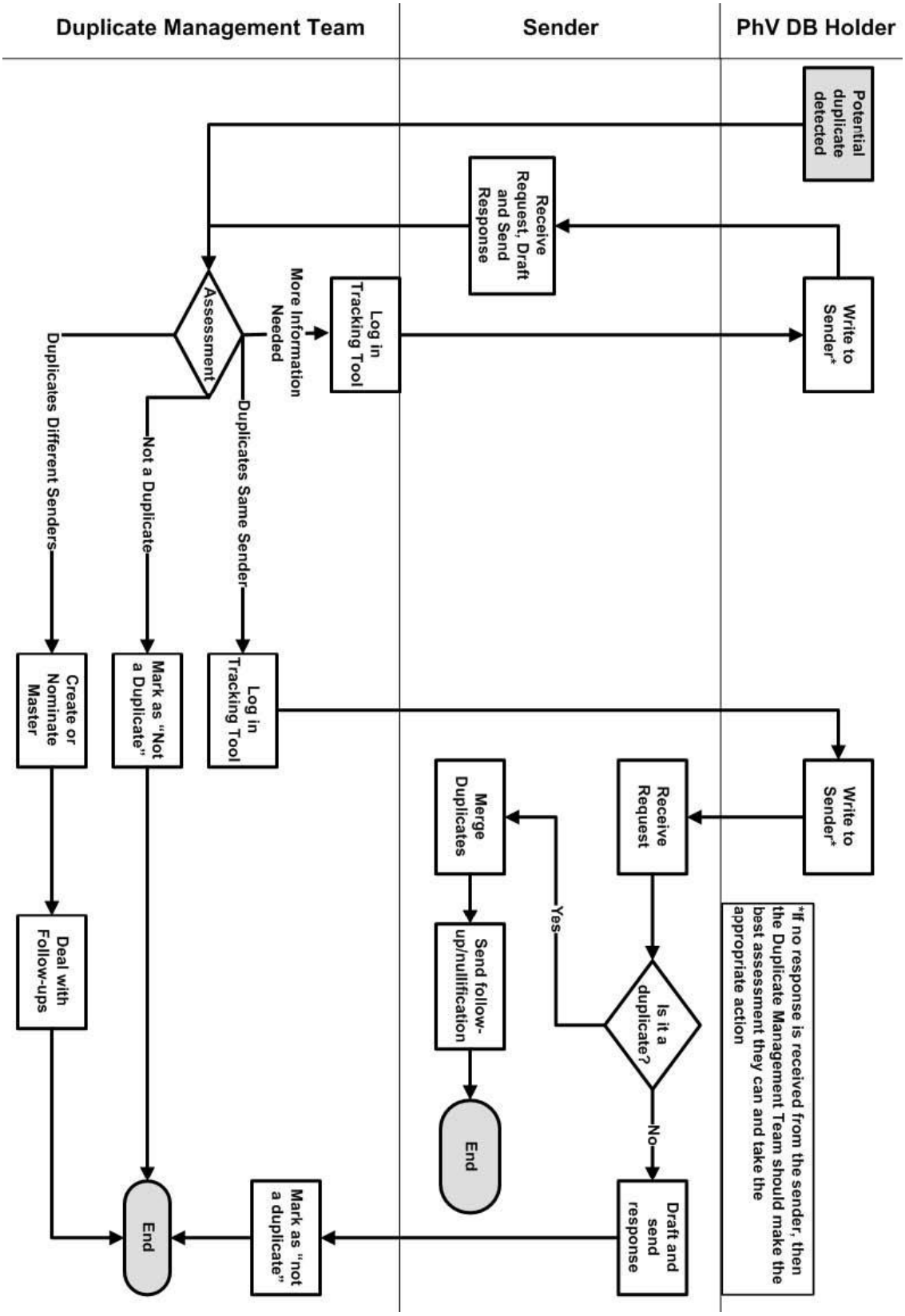

Table VI.6. Process description - Duplicate detection and management of ICSRs

DTM: Duplicate management team

No.	Step	Description	Responsible Organisation
1	**Start.** **Potential duplicate detected.**	**Potential duplicates have been detected by the PharmacoVigilance Database (PhV DB) holder organisation or the PhV DB holder organisation is notified of potential duplicates by a receiver of the cases.**	**PhV DB holder**
2	**Assessment.**	**All potential duplicates need assessment by the organisation Duplicate Management Team (DMT) to confirm or deny their duplicate status.** Following assessment there are 4 possible outcomes: ▪ Not a Duplicate (go to step 2.1), ▪ More Information Needed (go to step 2.2), ▪ Duplicates From Different Sender (go to step 2.3), ▪ Duplicates From Same Sender (go to step 2.4). The outcome of all assessments should be recorded to avoid continually reassessing the same cases when further versions arrive. These recorded outcomes can also be used to refine the duplicate detection methods during future development.	**DMT**
2.1	Not a Duplicate: Mark as not a duplicate.	If the cases are assessed as not being duplicates of one another, then mark both cases as such. Go to step 3 (End).	DMT
2.2	More information needed: Log in tracking tool.	There should be some form of tool for tracking when more information is needed, when correspondence has been sent, whether an answer was received and, if so, when.	DMT
2.2.1	**Write to Sender.**	More information is required in order to be able to make a definite assessment. The sender (who transmitted the case(s) in question to the PhVDB holder's organisation) should be contacted to request specific information necessary to confirm or deny duplication. Personal data protection must remain paramount, so unsecured communications should not include sufficient data to identify an individual.	**PhV DB holder**

No.	Step	Description	Responsible Organisation
2.2.2	**Receive request, draft and send response.**	Once a request for more information has been received, the Sender of the case should respond promptly, either as a follow-up version of the case or by responding to the requester. The DMT should then reassess the case based on the new information (Go back to step 2).	**Sender**
2.3	**Duplicates Different Senders: Create or nominate master.**	Once cases have been determined to be duplicates of one another and have been transmitted to the PhV DB holder by different senders or reporters, then they should be merged under a master case, following the process described in chapter 2.3 "Management of duplicate cases" of the Guideline on the Detection and Management of Duplicate Individual Cases and Individual Case Safety Reports (ICSRs), EMA/13432/2009, (see GVP Annex III). This is an EMA guideline which is adopted in the Arab Countries from the scientific point of view.	**DMT**
2.3.1	Deal with follow-ups.	If any follow-ups arrive for any of the cases, this information may require a reassessment of the master case. Reassess and, if necessary, amend the master case as with any received follow-up information. Go to step 3 (End).	DMT
2.4	**Duplicates Same Sender: Log in tracking tool.**	Once cases have been determined to be duplicates of one another, and have been transmitted to the PhV DB holder by the same sender, then this decision and the correspondence referred to in step 2.4.1 should be logged in the tracking tool referred to in step 2.2.	**DMT**
2.4.1	**Write to Sender.**	The sender organisation, as the source of the duplicates, should be contacted in accordance with chapter 2.3.3 of the Guideline on the Detection and Management of Duplicate Individual Cases and Individual Case Safety Reports (ICSRs), EMA/13432/2009 , (see GVP Annex III). This is an EMA guideline which is adopted in the Arab Countries from the scientific point of view. The sender should be asked to confirm or deny duplication and take appropriate steps in accordance with chapter 2.3.1 of the aforementioned Guideline.	**PhV DB holder**
2.4.2	**Receive request.**	Receive and log the communication containing information on suspected duplicates in the Sender's PhV	**Sender**

No.	Step	Description	Responsible Organisation
		DB.	
2.4.3	Is it a duplicate?	Assess the potential duplicates. Are the cases duplicates of one another? If Yes, go to step 2.4.3.1. If No, go to step 2.4.3.2.	Sender
2.4.3.1	Merge duplicates.	Merge the duplicates, taking into account Flowchart 1 of chapter 2.3.1.3 of the Guideline on the Detection and Management of Duplicate Individual Cases and Individual Case Safety Reports (ICSRs), EMA/13432/2009, (see GVP Annex III). This is an EMA guideline which is adopted in the Arab Countries from the scientific point of view.	Sender
2.4.3.1.1	Send follow-up /nullification	For the cases that are merged under the master, send a nullification message to the PhV DB holder. For the case that is master, send the updated case to the PhV DB holder as follow-up information. The merging & transmission should be completed promptly and in any case within 15 days of the date of receipt of the information from the PhV DB holder that the cases were considered to be possible duplicates. This date should be treated as the date of receipt of most recent information for regulatory reporting purposes.	Sender
2.4.3.1.2	**End.**	**The duplicates have now been removed from both the Sender's system and that of the PhV DB holder and only the master should be available for signal detection and data quality analyses.** **Unless follow-up information is received, then no further steps need be taken.**	**Sender**
2.4.3.2	Draft and send a response.	Reply to the PhV DB holder who sent the communication informing that the cases are not duplicates.	Sender
2.4.3.2.1	**Mark as "Not a duplicate".**	Upon receipt of confirmation from the Sender organisation that the cases are not duplicates, mark the cases as "Not a duplicate" & go to step 3 (End).	**DMT**
3	**End.**	**No further action is required for this couple.**	**DMT**

Guideline on good pharmacovigilance practices (GVP) For Arab Countries

GVP: Modules

Module VII - Periodic safety update report (PSUR)

VII.A. Introduction

Periodic safety update reports (PSURs) are pharmacovigilance documents intended to provide an evaluation of the risk-benefit balance of a medicinal product for submission by marketing authorisation holders at defined time points during the post-authorisation phase.

The legal requirements for submission of PSURs are established in national regulation. All applicable legal requirements in this Module are referenced by the modal verb “shall”. Guidance for the implementation of legal requirements is provided using the modal verb “should”.

This Module provides guidance on the preparation, submission and assessment of PSURs.

The scope, objectives, format and content of the PSUR are described in VII.B. The required format and content of PSURs in the Arab Countries are based on those for PSUR described in the European Good Pharmacovigilance Practice as well as for the Periodic Benefit Risk Evaluation Report (PBRER) described in the ICH-E2C(R2) guideline. The PBRER format replaces the PSUR format previously described in the ICH-E2C(R1). In line with the national legislation, the report is described as PSUR in the GVP Modules in the Arab Countries.

The adoption of the "European Good Pharmacovigilance Practice" as a base for this guideline does not undermine the right of a national medicines authority in the Arab Countries to have additional or sometimes changed requirements. **Multinational** marketing authorization holders should be attentive to these national requirements and take the necessary measure to comply with them.

Further details and guidance for the submission of PSURs in the Arab Countries, including the list of Union references dates and frequency of submission are provided in VII.C. As this guideline was based on the European Good Pharmacovigilance Practice; the "list of EU reference dates" is adopted in this guideline as well. Hence, the PSURs submitted in the Arab Countries shall follow the dates & frequency stated in the most updated version of this list, despite this, the national medicines authority in the Arab Countries may request the submission of PSURs at any time or to change as appropriate the submission frequency on the national level.

The single national assessment of PSURs is covered in VII.C.4. Details related to the quality system are provided in VII.C.6.

Each marketing authorisation holder shall be responsible for submitting PSURs for its own products to the national medicines authorities in the Arab Countries according to the following timelines:

- within 70 calendar days of the data lock point (day 0) for PSURs covering intervals up to 12 months (including intervals of exactly 12 months); and
- within 90 calendar days of the data lock point (day 0) for PSURs covering intervals in excess of 12 months;
- the timeline for the submission of ad hoc PSURs requested by national medicines authorities will normally be specified in the request, otherwise the ad hoc PSURs should be submitted within 90 calendar days of the data lock point.

It should be noted that detailed listings of individual cases shall not be included systematically. The PSUR should focus on summary information, scientific safety assessment and integrated

benefit-risk evaluation.

The obligations imposed in respect of PSURs should be proportionate to the risks posed by medicinal products. PSUR reporting should therefore be linked to the risk management systems of a medicinal product (see Module V). The "modular approach" of the PSUR described in VII.B.5. aims to minimise duplication and improve efficiency during the preparation and review of PSURs along with other regulatory documents such as the safety specification in the Risk Management Plan (RMP), by enabling the common content of particular sections where appropriate to be utilised interchangeably across different PSURs and RMPs.

Competent National medicines authorities in the Arab Countries shall assess PSURs to determine whether there are new risks or whether risks have changed or whether there are changes to the risk-benefit balance of medicinal products.

In order to avoid duplication of efforts and to prioritise the use of limited resources, a single assessment of PSURs for different authorised medicinal products containing the same active substance or the same combination of active substances should be performed in each Arab Country.

As part of the assessment, it should be considered whether further investigations need to be carried out and whether any action concerning the marketing authorisations of products containing the same active substance or the same combination of active substances, and their product information is necessary.

PSURs for generic medicinal products, well-established use medicinal products, homeopathic medicinal products and traditional herbal medicinal products are required to be submitted in the Arab Countries (unless otherwise is announced by the national medicines authority in each Arab Country).

VII.B. Structures and processes

VII.B.1. Objectives of the periodic update safety report (PSUR)

The main objective of a PSUR is to present a comprehensive, concise and critical analysis of the risk-benefit balance of the medicinal product taking into account new or emerging information in the context of cumulative information on risks and benefits. The PSUR is therefore a tool for post-authorisation evaluation at defined time points in the lifecycle of a product.

For the purposes of lifecycle benefit-risk management, it is necessary to continue evaluating the risks and benefits of a medicine in everyday medical practice and long term use in the post-authorisation phase. This may extend to evaluation of populations and endpoints that could not be investigated in the pre-authorisation clinical trials. A different risk-benefit balance may emerge as pharmacovigilance reveals further information about safety. The marketing authorisation holder should therefore re-evaluate the risk-benefit balance of its own medicinal products in populations exposed. This structured evaluation should be undertaken in the context of ongoing pharmacovigilance (see Module XII) and risk management (see Module V) to facilitate optimisation of the risk-benefit balance through effective risk minimisation.

Urgent safety information should be reported through the appropriate mechanism. A PSUR is not

intended, in the first instance, for notification of significant new safety or efficacy information or to provide the means by which new safety issues are detected, (see Module IX and XII). It is acknowledged that the review of the data in the PSUR may lead to new safety issues being identified.

VII.B.2. Principles for the evaluation of the risk-benefit balance within PSURs and scope of the information to be included

Benefit-risk evaluation should be carried out throughout the lifecycle of the medicinal product to promote and protect public health and to enhance patient safety through effective risk minimisation.

After a marketing authorisation is granted, it is necessary to continue evaluating the benefits and risks of medicinal products in actual use and/or long term use, to confirm that the risk-benefit balance remains favourable.

The analysis of the risk-benefit balance should incorporate an evaluation of the safety, efficacy and effectiveness information that becomes available[33], with reasonable and appropriate effort, during the reporting interval for the medicinal product in the context of what was known previously.

The risk evaluation should be based on **all uses** of the medicinal product. The scope includes evaluation of safety in real medical practice including use in **unauthorised indications** and **use which is not in line with the product information**. If use of the medicinal product is identified where there are critical gaps in knowledge for **specific safety issues or populations**, such use should be reported in the PSUR (e.g. use in paediatric population or in pregnant women). Sources of information on use outside authorisation may include drug utilisation data, information from spontaneous reports and publications in the literature.

The scope of the benefit information should include both clinical trial and real world data in authorised indications.

The integrated benefit-risk evaluation should be performed for all authorised indications and should incorporate the evaluation of risks in all use of the medicinal product (including use in unauthorised indications).

The evaluation should involve:

1. Critically examining the information which has emerged during the reporting interval to determine whether it has generated new signals, led to the identification of new potential or identified risks or contributed to knowledge of previously identified risks.
2. Critically summarising relevant new safety, efficacy and effectiveness information that could have an impact on the risk-benefit balance of the medicinal product.
3. Conducting an integrated benefit-risk analysis for all authorised indications based on the

[33] The ICH-E2C(R2) guideline should not serve to limit the scope of the information to be provided in the benefit-risk evaluation of a medicinal product. Please refer to the applicable national laws and regulations in the countries and regions.
For Arab Country specific requirements, see VII.C.5.

cumulative information available since the development international birth date (DIBD), the date of first authorisation for the conduct of an interventional clinical trial in any country. For the cases where the DIBD is unknown or the marketing authorisation holder does not have access to data from the clinical development period, the earliest possible applicable date should be used as starting point for the inclusion and evaluation of the cumulative information.

4. Summarising any risk minimisation actions that may have been taken or implemented during the reporting interval, as well as risk minimisation actions that are planned to be implemented.
5. Outlining plans for signal or risk evaluations including timelines and/or proposals for additional pharmacovigilance activities.

VII.B.3. Principles for the preparation of PSURs

Unless otherwise specified by national medicines authorities, the marketing authorisation holder shall prepare a single PSUR for all its medicinal products containing the same active substance with information covering all the authorised indications, route of administration, dosage forms and dosing regiments, irrespective of whether authorised under different names and through separate procedures. Where relevant, data relating to a particular indication, dosage form, route of administration or dosing regimen, shall be presented in a separate section of the PSUR and any safety concerns shall be addressed accordingly. There might be exceptional scenarios where the preparation of separate PSURs might be appropriate, for instance, in the event of different formulations for entirely different indications. In this case, agreement should be obtained from the relevant national medicines authorities preferably at the time of authorisation.

Case narratives shall be provided in the relevant risk evaluation section of the PSUR where integral to the scientific analysis of a signal or safety concern. In this context, the term “case narratives” refers to clinical evaluations of individual cases rather than the CIOMS narratives. It should not be necessary to provide the actual CIOMS narrative text included in the individual case safety report (ICSR) but rather a clinical evaluation of important or illustrative cases in the context of the evaluation of the safety concern/signal.

When data received at the marketing authorisation holder from a partner might contribute meaningfully to the safety, benefit and/or benefit-risk analyses and influence the reporting marketing authorisation holder’s product information, these data should be included and discussed in the PSUR.

Each PSUR should include interval as well as cumulative data. As the PSUR should be a single stand–alone document for the reporting interval, based on cumulative data, summary bridging reports and addendum reports, introduced in ICH-E2C(R1) guideline, will not be accepted.

The GVP Modules on Product- or Population-Specific Considerations should be consulted as applicable when preparing a PSUR.

VII.B.4. Reference information

Risk minimisation activities evaluated in the PSUR include updates to the product information.

The reference product information for the PSUR should include “core safety” and “authorised

indications" components. In order to facilitate the assessment of benefit and risk-benefit balance by indication in the evaluation sections of the PSUR, the reference product information document should list all authorised indications in ICH countries or regions. When the PSUR is also submitted to countries other than the ICH regions (e.g. Arab Countries) in which there are additional locally authorised indications, these indications may be either added to the reference product information or handled in the national appendix as considered most appropriate by the marketing authorization holder and the national medicines authority in the concerned country. The basis for the benefit evaluation should be the baseline important efficacy and effectiveness information summarised in the PSUR section 17.1 ("Important baseline efficacy and effectiveness information").

Information related to a specific indication, formulation or route of administration should be clearly identified in the reference product information.

The following possible options can be considered by the marketing authorisation holders when selecting the most appropriate reference product information for a PSUR:

- Company core data sheet (CCDS)
  - It is common practice for marketing authorisation holders to prepare their own company core data sheet which covers data relating to safety, indications, dosing, pharmacology, and other information concerning the product. The core safety information contained within the CCDS is referred to as the company core safety information (CCSI). A practical option for the purpose of the PSUR is for each marketing authorisation holder to use the CCDS in effect at the end of the reporting interval, as reference product information for both the risk sections of the PSUR as well as the main authorised indications for which benefit is evaluated.
  - When the CCDS does not contain information on authorised indications, the marketing authorisation holder should clearly specify which document is used as reference information for the authorised indications in the PSUR.
- Other options for the reference product information
  - When no CCDS or CCSI exist for a product (e.g. where the product is authorised in only one country or region, or for /generics), the marketing authorisation holder should clearly specify the reference information being used. This may comprise national or regional product information.
  - Where the reference information for the authorised indications is a separate document to the reference safety information (the core safety information contained within the reference product information), the version in effect at the end of the reporting interval should be included as an appendix to the PSUR (see VII.B.5.20.).

The marketing authorisation holder should continuously evaluate whether any revision of the reference product information/reference safety information is needed whenever new safety information is obtained during the reporting interval and ensure that significant changes made over the interval are described in PSUR section 4 ("Changes to the reference safety information") and where relevant, discussed in PSUR section 16 ("Signal and risk evaluation"). These changes may include:

- changes to contraindications, warnings/precautions sections;

- addition to adverse reactions and interactions;
- addition of important new information on use in overdose; and
- removal of an indication or other restrictions for safety or lack of efficacy reasons.

The marketing authorisation holder should provide a clean copy of all versions of the reference product information in effect at the end of the reporting interval (e.g. different formulations included in the same PSUR) as an appendix to the PSUR (see VII.B.5.20.). The reference product information should be dated and version controlled.

Where new information on safety that could warrant changes to the authorised product information (e.g. new adverse drug reaction, warning or contraindication) has been added to the reference safety information during the period from the data lock point to the submission of the PSUR, this information should be included in the PSUR section 14 ("Late-breaking information"), if feasible.

If stipulated by applicable national requirements, the marketing authorisation holder should provide, in the national appendix, information on any final, ongoing and proposed changes to the national or local authorised product information (see VII.C.5.).

VII.B.5. Format and contents of the PSUR

The PSUR shall be based on all available data and shall focus on new information which has emerged since the data lock point of the last PSUR. Cumulative information should be taken into account when performing the overall safety evaluation and integrated benefit-risk assessment.

Because clinical development of a medicinal product frequently continues following marketing authorisation, relevant information from post-authorisation studies or clinical trials in unauthorised indications or populations should also be included in the PSUR. Similarly, as knowledge of the safety of a medicinal product may be derived from evaluation of other data associated with off-label use, such knowledge should be reflected in the risk evaluation where relevant and appropriate.

The PSUR shall provide summaries of data relevant to the benefits and risks of the medicinal product, including results of all studies with a consideration of their potential impact on the marketing authorisation.

Examples of sources of efficacy, effectiveness and safety information that may be used in the preparation of PSURs include the following:

- non-clinical studies;
- spontaneous reports (e.g. on the marketing authorisation holder's safety database);
- active surveillance systems (e.g. sentinel sites);
- investigations of product quality;
- product usage data and drug utilisation information;
- clinical trials, including research in unauthorised indications or populations;
- observational studies, including registries;
- patient support programs;

- systematic reviews and meta-analysis;
- marketing authorisation holders sponsored websites[34];
- published scientific literature or reports from abstracts, including information presented at scientific meetings;
- unpublished manuscripts;
- licensing partners, other sponsors or academic institutions and research networks;
- medicines authorities (worldwide).

The above list is not intended to be all inclusive, and additional data sources may be used by the marketing authorisation holder to present safety, efficacy and effectiveness information in the PSUR and to evaluate the risk-benefit balance, as appropriate to the product and its known and emerging important benefits and risks. When desired by the marketing authorisation holder, a list of the sources of information used to prepare the PSUR can be provided as an appendix to the PSUR.

A PSUR shall be prepared following the full modular structure set out below in this GVP module [Part I, Part II and Part III (section 1 to section 20)].

For the purposes of this Module, sources of information include data regarding the active substance(s) included in the medicinal product, or the medicinal product that the marketing authorisation holder may reasonably be expected to have access to and that are relevant to the evaluation of the safety, and/or risk-benefit balance. It is therefore recognised that while the same format (as defined in this GVP module) shall be followed for all products, the extent of the information provided may vary where justified according to what is accessible to the marketing authorisation holder. For example, for a marketing authorisation holder sponsored clinical trial, there should be access to patient level data while for a clinical trial not sponsored by the marketing authorisation holder, only the published report may be accessible.

The level of detail provided in certain sections of the PSUR should depend on known or emerging important information on the medicinal product's benefits and risks. This approach is applicable to those sections of the PSUR in which there is evaluation of information about safety, efficacy, effectiveness, safety signals and risk-benefit balance.

When preparing the PSUR, the ICH-E2C(R2) guideline (see Annex IV ICH-E2C(R2)) on PBRER should also be applied. Guidance on the titles, order and content of the PSUR sections is provided in VII.B.5.1. to VII.B.5.21.. **When no relevant information is available for any of the sections, this should be stated under the section, <u>but do NOT omit any section</u>**.

- Part I: Title page including signature[35]
- Part II: Executive Summary
- Part III: Table of Contents

[34] ICH-E2D Post-Approval Safety Data Management: Definitions and Standards for Expedited Reporting.

[35] For PSURs submission, it is at the discretion of the QPPV to determine the most appropriate person to sign the document according to the marketing authorisation holder structure and responsibilities. A statement confirming the designation by the QPPV should be included. No delegation letters should be submitted.

1. Introduction
2. Worldwide marketing authorisation status
3. Actions taken in the reporting interval for safety reasons
    a. Actions related to investigational uses *(not applicable for generics)*
    b. Actions related to marketing experience
4. Changes to reference safety information
5. Estimated exposure and use patterns
    5.1. Cumulative subject exposure in clinical trials *(not applicable for generics)*
    5.2. Cumulative and interval patient exposure from marketing experience
6. Data in summary tabulations
    6.1. Reference information
    6.2. Cumulative summary tabulations of serious adverse events from clinical trials *(not applicable for generics)*
    6.3. Cumulative and interval summary tabulations from post-marketing data sources
7. Summaries of significant findings from clinical trials during the reporting interval *(not applicable for generics)*
    7.1. Completed clinical trials
    7.2. Ongoing clinical trials
    7.3. Long-term follow-up
    7.4. Other therapeutic use of medicinal product
    7.5. New safety data related to fixed combination therapies
8. Findings from non-interventional studies
9. Information from other clinical trials and sources
    9.1. Other clinical trials *(not applicable for generics)*
    9.2. Medication errors
10. Non-clinical Data *(not applicable for generics)*
11. Literature
12. Other periodic reports
13. Lack of efficacy in controlled clinical trials *(not applicable for generics)*
14. Late-breaking information
15. Overview of signals: new, ongoing or closed
16. Signal and risk evaluation
    16.1. Summaries of safety concerns

16.2. Signal evaluation

16.3. Evaluation of risks and new information

16.4. Characterisation of risks

16.5. Effectiveness of risk minimisation (if applicable)

17. Benefit evaluation

17.1. Important baseline efficacy and effectiveness information

17.2. Newly identified information on efficacy and effectiveness

17.3. Characterisation of benefits

18. Integrated benefit-risk analysis for authorised indications

18.1. Benefit-risk context – Medical need and important alternatives

18.2. Benefit-risk analysis evaluation

19. Conclusions and actions

20. Appendices to the PSUR

An abridged PSUR, which is suitable for generic medicinal products in the Arab Countries, can be used; the cover letter should state "abridged PSUR". Sections which are not required from generics in the abridged PSUR should NOT be omitted instead state that it is not applicable for generics with referral to this guideline. The not required section from generics in the abridged PSUR are indicated in the aforeward content.

Part I: PSUR title page

The title page should include the name of the medicinal product(s)[36] and substance, international birth date (IBD) (the date of the first marketing authorisation for any product containing the active substance granted to any company in any country in the world), reporting interval, date of the report, marketing authorisation holder details and statement of confidentiality of the information included in the PSUR.

The title page shall also contain the signature.

Part II: PSUR executive summary

An executive summary should be placed immediately after the title page and before the table of contents. The purpose of the executive summary is to provide a concise summary of the content and the most important information in the PSUR and should contain the following information:

- introduction and reporting interval;
- medicinal product(s), therapeutic class(es), mechanism(s) of action, indication(s), pharmaceutical formulation(s), dose(s) and route(s) of administration;

[36] For PSURs covering multiple products, for practical reasons, this information may be provided in the PSUR Cover Page (See Annex II)

- estimated cumulative clinical trials exposure;
- estimated interval and cumulative exposure from marketing experience;
- number of countries in which the medicinal product is authorised;
- summary of the overall benefit-risk analysis evaluation (based on sub-section 18.2 “benefit-risk analysis evaluation” of the PSUR);
- actions taken and proposed for safety reasons, (e.g. significant changes to the reference product information, or other risk minimisation activities);
- conclusions.

Part III: PSUR table of contents

The executive summary should be followed by the table of contents.

VII.B.5.1. PSUR section “Introduction”

The marketing authorisation holder should briefly introduce the product(s) so that the PSUR “stands alone” but it is also placed in perspective relative to previous PSURs and circumstances. The introduction should contain the following information:

- IBD, and reporting interval;
- medicinal product(s), therapeutic class(es), mechanism(s) of action, authorised indication(s), pharmaceutical form(s), dose(s) and route(s) of administration;
- a brief description of the population(s) being treated and studied;

VII.B.5.2. PSUR section “Worldwide marketing authorisation status"

This section of the PSUR should contain a brief narrative overview including: date of the first authorisation worldwide, indications(s), authorised dose(s), and where authorised.

VII.B.5.3. PSUR section “Actions taken in the reporting interval for safety reasons”

This section of the PSUR should include a description of significant actions related to safety that have been taken worldwide during the reporting interval, related to either investigational uses or marketing experience by the marketing authorisation holder, sponsors of clinical trial(s), data monitoring committees, ethics committees or national medicines authorities that had either:

- a significant influence on the risk-benefit balance of the authorised medicinal product; and/or
- an impact on the conduct of a specific clinical trial(s) or on the overall clinical development programme.

If known, the reason for each action should be provided and any additional relevant information should be included as appropriate. Relevant updates to previous actions should also be summarised in this section.

Examples of significant actions taken for safety reasons include:

Actions related to investigational uses:

- refusal to authorise a clinical trial for ethical or safety reasons;
- partial[37] or complete clinical trial suspension or early termination of an ongoing clinical trial because of safety findings or lack of efficacy;
- recall of investigational drug or comparator;
- failure to obtain marketing authorisation for a tested indication including voluntary withdrawal of a marketing authorisation application;
- risk management activities, including: − protocol modifications due to safety or efficacy concerns (e.g. dosage changes, changes in study inclusion/exclusion criteria, intensification of subject monitoring, limitation in trial duration);
  - restrictions in study population or indications;
  - changes to the informed consent document relating to safety concerns;
  - formulation changes;
  - addition by regulators of a special safety-related reporting requirement;
  - issuance of a communication to investigators or healthcare professionals; and
  - plans for new studies to address safety concerns.

Actions related to marketing experience:

- failure to obtain or apply for a marketing authorisation renewal;
- withdrawal or suspension of a marketing authorisation;
- actions taken due to product defects and quality issues;
- suspension of supply by the marketing authorisation holder;
- risk management activities including:
  - significant restrictions on distribution or introduction of other risk minimisation measures;
  - significant safety-related changes in labelling documents including restrictions on use or population treated;
  - communications to health care professionals; and
  - new post-marketing study requirement(s) imposed by medicines authorities.

VII.B.5.4. PSUR section "Changes to reference safety information"

This PSUR section should list any significant changes made to the reference safety information within the reporting interval. Such changes might include information relating to contraindications,

[37] "Partial suspension" might include several actions (e.g. suspension of repeat dose studies, but continuation of single dose studies; suspension of trials in one indication, but continuation in another, and/or suspension of a particular dosing regimen in a trial but continuation of other doses). ICH-E2C(R2) guideline (see Annex IV).

warnings, precautions, serious adverse drug reactions, interactions, important findings from ongoing or completed clinical trials and significant non-clinical findings (e.g. carcinogenicity studies). Specific information relevant to these changes should be provided in the appropriate sections of the PSUR.

VII.B.5.5. PSUR section "Estimated exposure and use patterns"

PSURs shall provide an accurate estimate of the population exposed to the medicinal product, including all data relating to the volume of sales and volume of prescriptions. This estimate of exposure shall be accompanied by a qualitative and quantitative analysis of actual use, which shall indicate, where appropriate, how actual use differs from the indicated use based on all data available to the marketing authorisation holder, including the results of observational or drug utilisation studies .

This PSUR section should provide estimates of the size and nature of the population exposed to the medicinal product including a brief description of the method(s) used to estimate the subject/patient exposure and the limitations of that method.

Consistent methods for calculating subject/patient exposure should be used across PSURs for the same medicinal product. If a change in the method is appropriate, both methods and calculations should be provided in the PSUR introducing the change and any important difference between the results using the two methods should be highlighted.

VII.B.5.5.1. PSUR sub-section "Cumulative subject exposure in clinical trials"

This section of the PSUR should contain the following information on the patients studied in clinical trials sponsored by the marketing authorisation holder, if applicable presented in tabular formats:

- cumulative numbers of subjects from ongoing and completed clinical trials exposed to the investigational medicinal product, placebo, and/or active comparator(s) since the DIBD. It is recognised that for "old products", detailed data might not be available;
- more detailed cumulative subject exposure in clinical trials should be presented if available (e.g. sub-grouped by age, sex, and racial/ethnic group for the entire development programme);
- important differences among trials in dose, routes of administration, or patient populations can be noted in the tables, if applicable, or separate tables can be considered;
- if clinical trials have been or are being performed in special populations (e.g. pregnant women; patients with renal, hepatic, or cardiac impairment; or patients with relevant genetic polymorphisms), exposure data should be provided as appropriate;
- when there are substantial differences in time of exposure between subjects randomised to the investigational medicinal product or comparator(s), or disparities in length of exposure between clinical trials, it can be useful to express exposure in subject-time (subject-days, -months, or -years);
- investigational drug exposure in healthy volunteers might be less relevant to the overall safety profile, depending on the type of adverse reaction, particularly when subjects are exposed to a

single dose. Such data can be presented separately with an explanation as appropriate;

- if the serious adverse events from clinical trials are presented by indication in the summary tabulations, the patient exposure should also be presented by indication, where available;
- for individual trials of particular importance, demographic characteristics should be provided separately.

Examples of tabular format for the estimated exposure in clinical trials are presented in VII. Appendix 1, Tables VII.2, VII.3 and VII.4.

VII.B.5.5.2. PSUR sub-section "Cumulative and interval patient exposure from marketing experience"

Separate estimates should be provided for cumulative exposure (since the IBD), when possible, and interval exposure (since the data lock point of the previous PSUR). Although it is recognised that it is often difficult to obtain and validate exposure data, the number of patients exposed should be provided whenever possible, along with the method(s) used to determine the estimate. Justification should be provided if it is not possible to estimate the number of patients exposed. In this case, alternative estimates of exposure, if available, should be presented along with the method(s) used to derive them. Examples of alternative measures of exposure include patient-days of exposure and number of prescriptions. Only if such measures are not available, measures of drug sales, such as tonnage or dosage units, may be used. The concept of a defined daily dose may also be used to arrive at patient exposure estimates.

The data should be presented according to the following categories:

1. Post-authorisation (non-clinical trial) exposure:

   An overall estimation of patient exposure should be provided. In addition, the data should be routinely presented by sex, age, indication, dose, formulation and region, where applicable. Depending upon the product, other variables may be relevant, such as number of vaccination courses, route(s) of administration, and duration of treatment.

   When there are patterns of reports indicating a safety signal, exposure data within relevant subgroups should be presented, if possible.

2. Post-authorisation use in special populations:

   Where post-authorisation use has occurred in special populations, available information regarding cumulative patient numbers exposed and the method of calculation should be provided. Sources of such data may include for instance non-interventional studies designed to obtain this information, including registries. Other sources of information may include data collection outside a study environment including information collected through spontaneous reporting systems (e.g. information on reports of pregnancy exposure without an associated adverse event may be summarised in this section). Populations to be considered for discussion include, but might not be limited to:

   - paediatric population;
   - elderly population;

- pregnant or lactating women;
- patients with hepatic and/or renal impairment;
- patients with other relevant co-morbidity;
- patients with disease severity different from that studied in clinical trials;
- sub-populations carrying relevant genetic polymorphism(s);
- populations with specific racial and/or ethnic origins.

3. Other post-authorisation use:

   If the marketing authorisation holder becomes aware of a pattern of use of the medicinal product, which may be regional, considered relevant for the interpretation of safety data, provide a brief description thereof. Examples of such patterns of use may include evidence of overdose, abuse, misuse and use beyond the recommendation(s) in the reference product information (e.g. an anti-epileptic drug used for neuropathic pain and/or prophylaxis of migraine headaches). Where relevant to the evaluation of safety and/or benefit-risk, information reported on patterns of use without reference to adverse reactions should be summarised in this section as applicable. Such information may be received via spontaneous reporting systems, medical information queries, customer's complaints, screening of digital media or via other information sources available to the marketing authorisation holder. If quantitative information on use is available, it should be provided.

   If known, the marketing authorisation holder may briefly comment on whether other use beyond the recommendation(s) in the reference product information may be linked to clinical guidelines, clinical trial evidence, or an absence of authorised alternative treatments. For purposes of identifying patterns of use outside the terms of the reference product information, the marketing authorisation holder should use the appropriate sections of the reference product information that was in effect at the end of the reporting interval of the PSUR (e.g. authorised indication, route of administration, contraindications).

Signals or risks identified from any data or information source should be presented and evaluated in the relevant sections of the PSUR.

Examples of tabular format for the estimated exposure from marketing experience are presented in VII. Appendix 1, Tables VII.5 and VII.6.

VII.B.5.6. PSUR section "Data in summary tabulations"

The objective of this PSUR section is to present safety data through summary tabulations of serious adverse events from clinical trials, spontaneous serious and non-serious reactions from marketing experience (including reports from healthcare professionals, consumers, scientific literature, medicines authorities (worldwide)) and serious reactions from non-interventional studies and other non-interventional solicited source. At the discretion of the marketing authorisation holder graphical displays can be used to illustrate specific aspects of the data when useful to enhance understanding.

When the Medical Dictionary for Regulatory Activities (MedDRA) terminology is used for coding

the adverse event/reaction terms, the preferred term (PT) level and system organ class (SOC) should be presented in the summary tabulations.

The seriousness of the adverse events/reactions in the summary tabulations should correspond to the seriousness assigned to events/reactions included in the ICSRs using the criteria established in ICH-E2A[38] (see Annex IV). When serious and non-serious events/reactions are included in the same ICSR, the individual seriousness per reaction should be reflected in the summary tabulations. Seriousness should not be changed specifically for the preparation of the PSURs.

VII.B.5.6.1. PSUR sub-section "Reference information"

This sub-section of the PSUR should specify the version(s) of the coding dictionary used for presentation of adverse events/reactions.

VII.B.5.6.2. PSUR sub-section "Cumulative summary tabulations of serious adverse events from clinical trials"

This PSUR sub-section should provide background for the appendix that provides a cumulative summary tabulation of serious adverse events reported in the marketing authorisation holder's clinical trials, from the DIBD to the data lock point of the current PSUR. The marketing authorisation holder should explain any omission of data (e.g. clinical trial data might not be available for products marketed for many years). The tabulation(s) should be organised by MedDRA SOC (listed in the internationally agreed order), for the investigational drug, as well as for the comparator arm(s) (active comparators, placebo) used in the clinical development programme. Data can be integrated across the programme. Alternatively, when useful and feasible, data can be presented by trial, indication, route of administration or other variables. In some Arab Countries, it may be accepted to use the WHO-Art terminology instead of MedDRA, consult with the national medicines authorities.

This sub-section should not serve to provide analyses or conclusions based on the serious adverse events.

The following points should be considered:

- Causality assessment is generally useful for the evaluation of individual rare adverse drug reactions. Individual case causality assessment has less value in the analysis of aggregate data, where group comparisons of rates are possible. Therefore, the summary tabulations should include all serious adverse events and not just serious adverse reactions for the investigational drug, comparators and placebo. It may be useful to give rates by dose.
- In general, the tabulation(s) of serious adverse events from clinical trials should include only those terms that were used in defining the case as serious and non-serious events should be included in the study reports.
- The tabulations should include blinded and unblinded clinical trial data. Unblinded serious adverse events might originate from completed trials and individual cases that have been unblinded for safety-related reasons (e.g. expedited reporting), if applicable. Sponsors of clinical

[38] ICH Topic E2A. Clinical safety data management: Definitions and standards for expedited reporting.

trials and marketing authorisation holders should not unblind data for the specific purpose of preparing the PSUR.

- Certain adverse events can be excluded from the clinical trials summary tabulations, but such exclusions should be explained in the report. For example, adverse events that have been defined in the protocol as "exempt" from special collection and entry into the safety database because they are anticipated in the patient population, and those that represent study endpoints, can be excluded (e.g. deaths reported in a trial of a drug for congestive heart failure where all-cause mortality is the primary efficacy endpoint, disease progression in cancer trials).

An example of summary tabulation of serious adverse events from clinical trials can be found in VII. Appendix 1 Table VII.7.

VII.B.5.6.3. PSUR sub-section "Cumulative and interval summary tabulations from post-marketing data sources"

This sub-section of the PSUR should provide background for the appendix that provides cumulative and interval summary tabulations of adverse reactions, from the IBD to the data lock point of the current PSUR. These adverse reactions are derived from spontaneous ICSRs including reports from healthcare professionals, consumers, scientific literature, medicines authorities (worldwide) and from solicited non-interventional ICSRs including those from non-interventional studies [34]. Serious and non-serious reactions from spontaneous sources, as well as serious adverse reactions from non-interventional studies and other non-interventional solicited sources should be presented in a single table, with interval and cumulative data presented side-by-side. The table should be organised by MedDRA SOC (listed in the internationally agreed order). For special issues or concerns, additional tabulations of adverse reactions can be presented by indication, route of administration, or other variables. In some Arab Countries, it may be accepted to use the WHO-Art terminology instead of MedDRA, consult with the national medicines authorities.

As described in ICH-E2D (see Annex IV) guideline, for marketed medicinal products, spontaneously reported adverse events usually imply at least a suspicion of causality by the reporter and should be considered to be suspected adverse reactions for regulatory reporting purposes.

Analysis or conclusions based on the summary tabulations should not be provided in this PSUR sub-section.

An example of summary tabulations of adverse drug reactions from post-marketing data sources can be found in VII. Appendix 1 Table VII.8.

VII.B.5.7. PSUR section "Summaries of significant findings from clinical trials during the reporting interval"

This PSUR section should provide a summary of the clinically important emerging efficacy and safety findings obtained from the marketing authorisation holder's sponsored clinical trials during the reporting interval, from the sources specified in the sub-sections listed below. When possible and relevant, data categorised by sex and age (particularly paediatrics versus adults), indication, dose, and region should be presented.

Signals arising from clinical trial sources should be tabulated in PSUR section 15 ("Overview on

signals: new, ongoing or closed"). Evaluation of the signals, whether or not categorised as refuted signals or either potential or identified risk, that were closed during the reporting interval should be presented in PSUR section 16.2 ("Signal evaluation"). New information in relation to any previously known potential or identified risks and not considered to constitute a newly identified signal should be evaluated and characterised in PSUR sections 16.3 ("Evaluation of risks and new information") and 16.4 ("Characterisation of risks") respectively.

Findings from clinical trials not sponsored by the marketing authorisation holder should be described in the relevant sections of the PSUR.

When relevant to the benefit-risk evaluation, information on lack of efficacy from clinical trials for treatments of non-life-threatening diseases in authorised indications should also be summarised in this section. Information on lack of efficacy from clinical trials with products intended to treat or prevent serious or life-threatening illness should be summarised in section 13 ("Lack of efficacy in controlled clinical trials") (VII.B.5.13).

Information from other clinical trials/study sources should be included in the PSUR sub-section 9.1 ("other clinical trials") (VII.B.5.9.1).

In addition, the marketing authorisation holder should include an appendix listing the sponsored post-authorisation interventional trials with the primary aim of identifying, characterising, or quantifying a safety hazard or confirming the safety profile of the medicinal product that were completed or ongoing during the reporting interval. The listing should include the following information for each trial:

- study ID (e.g. protocol number or other identifier);
- study title (abbreviated study title, if applicable);
- study type (e.g. randomised clinical trial, cohort study, case-control study);
- population studied, including country and other relevant population descriptors (e.g. paediatric population or trial subjects with impaired renal function);
- study start (as defined by the marketing authorisation holder) and projected completion dates;
- status: ongoing (clinical trial has begun) or completed (clinical study report is finalised).

VII.B.5.7.1. PSUR sub-section "Completed clinical trials"

This sub-section of the PSUR should provide a brief summary of clinically important emerging efficacy and safety findings obtained from clinical trials completed during the reporting interval. This information can be presented in narrative format or as a synopsis[39]. It could include information that supports or refutes previously identified safety concerns as well as evidence of new safety signals.

[39] Examples of synopses can be found in ICH-E3: Structure and Content of Clinical Study Reports and CIOMS VII (Council for International Organizations of Medical Sciences (CIOMS). Development Safety Update Report (DSUR): Harmonizing the Format and Content for Periodic Safety Reporting During Clinical Trials - Report of CIOMS Working Group VII). Geneva: CIOMS; 2006. http://www.cioms.ch/.

VII.B.5.7.2. PSUR sub-section "Ongoing clinical trials"

If the marketing authorisation holder is aware of clinically important information that has arisen from ongoing clinical trials (e.g. learned through interim safety analyses or as a result of unblinding of subjects with adverse events), this sub-section should briefly summarise the concern(s). It could include information that supports or refutes previously identified safety concerns, as well as evidence of new safety signals.

VII.B.5.7.3. PSUR sub-section "Long term follow-up"

Where applicable, this sub-section should provide information from long-term follow-up of subjects from clinical trials of investigational drugs, particularly advanced therapy products (e.g. gene therapy, cell therapy products and tissue engineered products).

VII.B.5.7.4. PSUR sub-section "Other therapeutic use of medicinal product"

This sub-section of the PSUR should include clinically important safety information from other programmes conducted by the marketing authorisation holder that follow a specific protocol, with solicited reporting as per ICH-E2D[34] (e.g. expanded access programmes, compassionate use programmes, particular patient use, and other organised data collection).

VII.B.5.7.5. PSUR sub-section "New safety data related to fixed combination therapies"

Unless otherwise specified by national or regional regulatory requirements, the following options can be used to present data from combination therapies:

- If the active substance that is the subject of the PSURs is also authorised or under development as a component of a fixed combination product or a multi-drug regimen, this sub-section should summarise important safety findings from use of the combination therapy.
- If the product itself is a fixed combination product, this PSUR sub-section should summarise important safety information arising from the individual components whether authorised or under development.

The information specific to the combination can be incorporated into a separate section(s) of the PSUR for one or all of the individual components of the combination.

VII.B.5.8. PSUR section "Findings from non-interventional studies"

This section should also summarise relevant safety information or information with potential impact in the benefit-risk assessment from marketing authorisation holder-sponsored non-interventional studies that became available during the reporting interval (e.g. observational studies, epidemiological studies, registries, and active surveillance programmes). This should include relevant information from drug utilisation studies when relevant to multiple regions.

The marketing authorisation holder should include an appendix listing marketing authorisation holder-sponsored non-interventional studies conducted with the primary aim of identifying, characterising or quantifying a safety hazard, confirming the safety profile of the medicinal product, or of measuring the effectiveness of risk management measures which were completed or ongoing

during the reporting interval. (see VII.B.5.7. for the information that should be included in the listing).

Summary information based on aggregate evaluation of data generated from patient support programs may be included in this section when not presented elsewhere in the PSUR. As for other information sources, the marketing authorisation holder should present signals or risks identified from such information in the relevant sections of the PSUR.

VII.B.5.9. PSUR section "Information from other clinical trials and sources"

VII.B.5.9 1. PSUR sub-section "Other clinical trials"

This PSUR sub-section should summarise information relevant to the benefit-risk assessment of the medicinal product from other clinical trial/study sources which are accessible by the marketing authorisation holder during the reporting interval (e.g. results from pool analysis or meta-analysis of randomised clinical trials, safety information provided by co-development partners or from investigator-initiated trials).

VII.B.5.9 2. PSUR sub-section "Medication errors"

This sub-section should summarise relevant information on patterns of medication errors and potential medication errors, even when not associated with adverse outcomes. A potential medication error is the recognition of circumstances that could lead to a medication error, and may or may not involve a patient. Such information may be relevant to the interpretation of safety data or the overall benefit-risk evaluation of the medicinal product. A medication error may arise at any stage in the medication use process and may involve patients, consumers, or healthcare professionals.

VII.B.5.10. PSUR section "Non-clinical data"

This PSUR section should summarise major safety findings from non-clinical in vivo and in vitro studies (e.g. carcinogenicity, reproduction or immunotoxicity studies) ongoing or completed during the reporting interval. Results from studies designated to address specific safety concerns should be included in the PSUR, regardless of the outcome. Implications of these findings should be discussed in the relevant evaluation sections of the PSUR.

VII.B.5.11. PSUR section "Literature"

This PSUR section should include a summary of new and significant safety findings, either published in the peer-reviewed scientific literature or made available as unpublished manuscripts that the marketing authorisation holder became aware of during the reporting interval, when relevant to the medicinal product.

Literature searches for PSURs should be wider than those for individual adverse reaction cases as they should also include studies reporting safety outcomes in groups of subjects and **other products containing the same active substance**.

The special types of safety information that should be included, but which may not be found by a

search constructed specifically to identify individual cases, include:

- pregnancy outcomes (including termination) with no adverse outcomes;
- use in paediatric populations;
- compassionate supply, named patient use;
- lack of efficacy;
- asymptomatic overdose, abuse or misuse;
- medication error where no adverse events occurred;
- important non-clinical safety results.

If relevant and applicable, information on other active substances of the same class should be considered.

The publication reference should be provided in the style of the Vancouver Convention[40, 41]

VII.B.5.12. PSUR section "Other periodic reports"

This PSUR section will only apply in certain circumstances concerning fixed combination products or products with multiple indications and/or formulations where multiple PSURs are prepared in agreement with the national medicines authority. In general, the marketing authorisation holder should prepare a single PSUR for a single active substance (unless otherwise specified by the national medicines authority); however if multiple PSURs are prepared for a single medicinal product, this section should also summarise significant findings from other PSURs if they are not presented elsewhere within the report.

When available, based on the contractual agreements, the marketing authorisation holder should summarise significant findings from periodic reports provided during the reporting interval by other parties (e.g. sponsors, other marketing authorisation holders or other contractual partners).

VII.B.5.13. PSUR section "Lack of efficacy in controlled clinical trials"

This section should summarise data from clinical trials indicating lack of efficacy, or lack of efficacy relative to established therapy(ies), for products intended to treat or prevent serious or life-threatening illnesses (e.g. excess cardiovascular adverse events in a trial of a new anti-platelet medicine for acute coronary syndromes) that could reflect a significant risk to the treated population.

[40] Uniform requirements for manuscripts submitted to biomedical journals. International Committee of Medical Journal Editors. N Engl J Med. 1997 Jan 23;336(4):309-15. Available online: http://www.nejm.org/doi/full/10.1056/NEJM199701233360422

[41] Uniform Requirements for Manuscripts Submitted to Biomedical Journals: Writing and Editing for Biomedical Publication [Updated April 2010] Publication Ethics: Sponsorship, Authorship, and Accountability, International Committee of Medical Journal Editors. http://www.icmje.org/urm_full.pdf

VII.B.5.14. PSUR section "Late-breaking information"

The marketing authorisation holder should summarise in this PSUR section the potentially important safety, efficacy and effectiveness findings that arise after the data lock point but during the period of preparation of the PSUR. Examples include clinically significant new publications, important follow-up data, clinically relevant toxicological findings and any action that the marketing authorisation holder, a data monitoring committee, or a medicines authority (worldwide) has taken for safety reasons. New individual case reports should not be routinely included unless they are considered to constitute an important index case (i.e. the first instance of an important event) or an important safety signal or where they may add information to the evaluation of safety concerns already presented in the PSUR (e.g. a well documented case of aplastic anaemia in a medicinal product known to be associated with adverse effects on the bone marrow in the absence of possible alternative causes).

Any significant change proposed to the reference product information (e.g. new adverse reaction, warning or contraindication) which has occurred during this period, should also be included in this section of the PSUR (see VII.B.4.), where feasible.

The data presented in this section should also be taken into account in the evaluation of risks and new information (see VII.B.5.16.3.).

VII.B.5.15. PSUR section "Overview of signals: new, ongoing, or closed"

The general location for presentation of information on signals and risks within the PSUR is shown in figure VII.1 (see VII.B.5.21.). The purpose of this section is to provide a high level overview of signals[42] that were closed (i.e. evaluation was completed) during the reporting interval as well as ongoing signals that were undergoing evaluation at the end of the reporting interval. For the purposes of the PSUR, a signal should be included once it has undergone the initial screening or clarification step, and a determination made to conduct further evaluation by the marketing authorisation holder[43]. It should be noted that a safety signal is not synonymous with a statistic of disproportionate reporting for a specific medicine/event combination as a validation step is required. Signals may be qualitative (e.g., a pivotal individual case safety report, case series) or quantitative (e.g. a disproportionality score, findings of a clinical trial or epidemiological study). Signals may arise in the form of an information request or inquiry on a safety issue from a medicines authority (worldwide) (see Module IX).

Decisions regarding the subsequent classification of these signals and the conclusions of the evaluation, involve medical judgment and scientific interpretation of available data, which is presented in section 16 ("Signal and risk evaluation") of the PSUR.

[42] "Signal" means information arising from one or multiple sources, including observations and experiments, which suggests a new potentially causal association, or a new aspect of a known association between an intervention and an event or set of related events, either adverse or beneficial, that is judged to be of sufficient likelihood to justify verificatory action.

[43] For the purpose of the PSUR, the term "signal" in this section corresponds with the term "validated signal" described in GVP Module IX.

A new signal refers to a signal that has been identified during the reporting interval. Where new clinically significant information on a previously closed signal becomes available during the reporting interval of the PSUR, this would also be considered a new signal on the basis that a new aspect of a previously refuted signal or recognised risk warrants further action to verify. New signals may be classified as closed or ongoing, depending on the status of signal evaluation at the end of the reporting interval of the PSUR.

Examples of new signals would therefore include new information on a previously:

- Close and refuted signal, which would result in the signal being re-opened.
- Identified risk where the new information suggests a clinically significant difference in the severity or frequency of the risk (e.g. transient liver enzyme increases are identified risks and new information indicative of a more severe outcome such as hepatic failure is received, or neutropenia is an identified risk and a well documented case report of agranulocytosis with no presence of possible alternative causes is received).
- Identified risk for which a higher frequency or severity of the risk is newly found (e.g. in an indicated subpopulation).
- Potential risk which, if confirmed, would warrant a new warning, precaution, a new contraindication or restriction in indication(s) or population or other risk minimisation activities.

Within this section, or as an appendix the marketing authorisation holder should provide a tabulation of all signals ongoing or closed at the end of the reporting interval. This tabulation should include the following information:

- a brief description of the signal;
- date when the marketing authorisation holder became aware of the signal;
- status of the signal at the end of the reporting interval (close or ongoing);
- date when the signal was closed, if applicable;
- source of the signal;
- a brief summary of the key data;
- plans for further evaluation; and
- actions taken or planned.

An example of tabulation of signals can be found in VII. Appendix 2.

The detailed signal assessments for closed signals are not to be included in this section but instead should be presented in sub-section 16.2 (“Signal evaluation”) of the PSUR.

Evaluation of new information in relation to any previously known identified and potential risks and not considered to constitute a new signal should be provided in PSUR sub-section 16.3 (“Evaluation of risks and new information”).

When a medicines authority (worldwide) has requested that a specific topic (not considered a signal) be monitored and reported in a PSUR, the marketing authorisation holder should summarise the result of the analysis in this section if it is negative. If the specific topic becomes a signal, it should be included in the signal tabulation and discussed in sub-section 16.2 (“Signal evaluation”).

VII.B.5.16. PSUR section "Signal and risk evaluation"

The purpose of this section of the PSUR is to provide:

- A succinct summary of what is known about important identified and potential risks and missing information at the beginning of the reporting interval covered by the report (VII.B.5.16.1.).
- An evaluation of all signals closed during the reporting interval (VII.B.5.16.2.).
- An evaluation of new information with respect to previously recognised identified and potential risks (VII.B.5.16.3).
- An updated characterisation of important potential and identified risks, where applicable (VII.B.5.16.4.).
- A summary of the effectiveness of risk minimisation activities in any country or region which may have utility in other countries or regions (VII.B.5.16.5.).

A flowchart illustrating the mapping of signals and risks to specific sections/sub-sections of the PSUR can be found in VII.B.5.21.

These evaluation sub-sections should not summarise or duplicate information presented in previous sections of the PSUR but **should rather provide interpretation and critical appraisal** of the information, with a view towards characterising the profile of those risks assessed as important. In addition, as a general rule, it is not necessary to include individual case narratives in the evaluation sections of the PSUR but where integral to the scientific analysis of a signal or risk, a clinical evaluation of pivotal or illustrative cases (e.g. the first case of suspected agranulocytosis with an active substance belonging to a class known to be associated with this adverse reaction) should be provided (see VII.B.3.).

VII.B.5.16.1. PSUR sub-section "Summary of safety concerns"

The purpose of this sub-section is to provide a summary of important safety concerns at the beginning of the reporting interval, against which new information and evaluations can be made. For products with an existing safety specification, this section can be either the same as, or derived from the safety specification summary[44] that is current **at the start of the reporting interval** of the PSUR. It should provide the following safety information:

- important identified risks;
- important potential risks; and
- missing information.

The following factors should be considered when determining the importance of each risk:

- medical seriousness of the risk, including the impact on individual patients;
- its frequency, predictability, preventability, and reversibility;

[44] ICH-E2E – Pharmacovigilance planning (see Annex IV).

- potential impact on public health (frequency; size of treated population); and
- potential for avoidance of the use of a medicinal product with a preventive benefit due to a disproportionate public perception of risk (e.g. vaccines).

For products without an existing safety specification, this section should provide information on the important identified and potential risks and missing information associated with use of the product, based on pre- and post-authorisation experience. Important identified and potential risks may include, for example:

- important adverse reactions;
- interactions with other medicinal products;
- interactions with foods and other substances;
- medication errors;
- effects of occupational exposure; and
- pharmacological class effects.

The summary on missing information should take into account whether there are critical gaps in knowledge for specific safety issues or populations that use the medicinal product.

VII.B.5.16.2. PSUR sub-section "Signal evaluation"

This sub-section of the PSUR should summarise the results of evaluations of all safety signals (whether or not classified as important) that were closed during the reporting interval. A safety signal can be closed either because it is refuted or because it is determined to be a potential or identified risk, following evaluation. The two main categories to be included in this sub-section are:

1. Those signals that, following evaluation, have been refuted as "false" signals based on medical judgement and scientific evaluation of the currently available information.
2. Those signals that, following evaluation, have been categorised as either a potential or identified risk, including lack of efficacy.

For both categories of closed signals, a concise description of each signal evaluation should be included in order to clearly describe the basis upon which the signal was either refuted or considered to be a potential or identified risk by the marketing authorisation holder.

It is recommended that the level of detail provided in the description of the signal evaluation should reflect the medical significance of the signal (e.g. severe, irreversible, lead to increased morbidity or mortality) and potential public health importance (e.g. wide usage, frequency, significant use outside the recommendations of the product information) and the extent of the available evidence. Where multiple evaluations will be included under both categories of closed signals, they can be presented in the following order:

- Closed and refuted signals.
- Closed signals that are categorised as important potential risks.
- Closed signals that are categorised as important identified risks.
- Closed signals that are potential risks not categorised as important.

- Closed signals that are identified risks not categorised as important.

Where applicable the evaluations of closed signals can be presented by indication or population.

The description(s) of the signal evaluations can be included in this sub-section of the PSUR or in an appendix. Each evaluation should include the following information as appropriate:

- source or trigger of the signal;
- background relevant to the evaluation;
- method(s) of evaluation, including data sources, search criteria (where applicable, the specific MedDRA terms (e.g. PTs, HLTs, SOCs, etc.) or Standardised MedDRA Queries (SMQs) that were reviewed), and analytical approaches;
- results - a summary and critical analysis of the data considered in the signal evaluation; where integral to the assessment, this may include a description of a case series or an individual case (e.g. an index case of well documented agranulocytosis or Stevens Johnson Syndrome);
- discussion;
- conclusion.

Marketing authorisation holder's evaluations and conclusions for refuted signals should be supported by data and clearly presented.

VII.B.5.16.3. PSUR sub-section "Evaluation of risks and new information"

This sub-section should provide a critical appraisal of new information relevant to previously recognised risks that is not already included in sub-section 16.2 ("Signal evaluation").

New information that constitutes a signal with respect to a previously recognised risk or previously refuted signal should be presented in the signals tabulation (see VII.B.5.15.) and evaluated in sub-section 16.2 ("Signal evaluation"), if the signal is also closed during the reporting interval of the PSUR.

Updated information on a previously recognised risk that does not constitute a signal should be included in this sub-section. Examples include information that confirms a potential risk as an identified risk, or information which allows any other further characterisation of a previously recognised risk.

New information can be organised as follows:

1. New information on important potential risks.
2. New information on important identified risks.
3. New information on other potential risks not categorised as important.
4. New information on other identified risks not categorised as important.
5. Update on missing information.

The focus of the evaluation(s) is on new information which has emerged during the reporting interval of the PSUR. This should be concise and interpret the impact, if any, on the understanding and characterisation of the risk. Where applicable, the evaluation will form the basis for an updated

characterisation of important potential and identified risks in sub-section 16.4 ("Characterisation of risks") of the report. It is recommended that the level of detail of the evaluation included in this sub-section should be proportional to the available evidence on the risk and its medical significance and public health relevance.

The evaluation(s) of the new information and missing information update(s) can be included in this sub-section of the PSUR, or in an appendix. Each evaluation should include the following information as appropriate:

- source of the new information;
- background relevant to the evaluation;
- method(s) of evaluation, including data sources, search criteria, and analytical approaches;
- results – a summary and critical analysis of the data considered in the risk evaluation;
- discussion;
- conclusion, including whether or not the evaluation supports an update of the characterisation of any of the important potential and identified risks in sub-section 16.4 ("Characterisation of risks")

Any new information on populations exposed or data generated to address previously missing information should be critically assessed in this sub-section. Unresolved concerns and uncertainties should be acknowledged.

VII.B.5.16.4. PSUR sub-section "Characterisation of risks"

This sub-section should characterise important identified and potential risks based on cumulative data (i.e. not restricted to the reporting interval), and describe missing information.

Depending on the nature of the data source, the characterisation of risk may include, where applicable:

- frequency;
- numbers of cases (numerator) and precision of estimate, taking into account the source of the data;
- extent of use (denominator) expressed as numbers of patients, patient-time, etc., and precision of estimate;
- estimate of relative risk and precision of estimate;
- estimate of absolute risk and precision of estimate;
- impact on the individual patient (effects on symptoms, quality or quantity of life);
- public health impact;
- patient characteristics relevant to risk (e.g. patient factors (age, pregnancy/lactation, hepatic/renal impairment, relevant co-morbidity, disease severity, genetic polymorphism);
- dose, route of administration;
- duration of treatment, risk period;

- preventability (i.e. predictability, ability to monitor for a "sentinel" adverse reaction or laboratory marker);
- reversibility;
- potential mechanism; and
- strength of evidence and its uncertainties, including analysis of conflicting evidence, if applicable.

When missing information could constitute an important risk, it should be included as a safety concern. The limitations of the safety database (in terms of number of patients studied, cumulative exposure or long term use, etc.) should be discussed.

For PSURs for products with several indications, formulations, or routes of administration, where there may be significant differences in the identified and potential risks, it may be appropriate to present risks by indication, formulation, or route of administration. Headings that could be considered include:

- risks relating to the active substance;
- risks related to a specific formulation or route of administration (including occupational exposure);
- risks relating to a specific population; and
- risks associated with non-prescription use (for compounds that are available as both prescription and non-prescription products).

VII.B.5.16.5. PSUR sub-section: "Effectiveness of risk minimisation (if applicable)"

Risk minimisation activities are public health interventions intended to prevent the occurrence of an adverse drug reaction(s) associated with the exposure to a medicinal product or to reduce its severity should it occur. The aim of a risk minimisation activity is to reduce the probability or severity of an adverse drug reaction. Risk minimisation activities may consist of routine risk minimisation (e.g. product labelling) or additional risk minimisation activities (e.g. Direct Healthcare Professional Communication/educational materials).

The PSUR shall contain the results of assessments of the effectiveness of risk minimisation activities relevant to the risk-benefit assessment.

Relevant information on the effectiveness and/or limitations of specific risk minimisation activities for important identified risks that has become available during the reporting interval should be summarised in this sub-section of the PSUR.

Insights into the effectiveness of risk minimisation activities in any country or region that may have utility in other countries or regions are of particular interest. Information may be summarised by region, if applicable and relevant.

VII.B.5.17. PSUR section "Benefit evaluation"

PSUR sub-sections 17.1 ("Important baseline efficacy and effectiveness information") and 17.2 ("Newly identified information on efficacy and effectiveness") provide the baseline and newly

identified benefit information that support the characterisation of benefit described in sub-section 17.3 ("Characterisation of benefits") that in turn supports the benefit-risk evaluation in section 18 ("Integrated benefit-risk analysis for authorised indications").

VII.B.5.17.1. PSUR sub-section "Important baseline efficacy and effectiveness information"

This sub-section of the PSUR summarises information on both efficacy and effectiveness of the medicinal product at the beginning of the reporting interval and provides the basis for the benefit evaluation. This information should relate to authorised indication(s) of the medicinal product listed in the reference product information (See VII.B.4.).

For medicinal products with multiple indications, populations, and/or routes of administration, the benefit should be characterised separately by these factors when relevant.

The level of detail provided in this sub-section should be sufficient to support the characterisation of benefit in the PSUR sub-section 17.3 ("Characterisation of benefits") and the benefit-risk assessment in section 18 ("Integrated benefit-risk analysis for authorised indications").

VII.B.5.17.2. PSUR sub-section "Newly identified information on efficacy and effectiveness"

For some products, additional information on efficacy or effectiveness in authorised indications may have become available during the reporting interval. Such information should be presented in this sub-section of the PSUR. For authorised indications, new information on efficacy and effectiveness under conditions of actual use should also be described in this sub-section, if available. New information on efficacy and effectiveness in uses other than the authorised indications should not be included unless relevant for the benefit-risk evaluation in the authorised indications.

Information on indications newly authorised during the reporting interval should also be included in this sub-section. The level of detail provided in this section should be sufficient to support the characterisation of benefit in sub-section 17.3 ("Characterisation of benefits") and the benefit-risk assessment in section 18 ("Integrated benefit-risk analysis for authorised indications").

In this sub-section, particular attention should be given to vaccines, anti-infective agents or other medicinal products where changes in the therapeutic environment may impact on efficacy/effectiveness over time.

VII.B.5.17.3. PSUR sub-section "Characterisation of benefits"

This sub-section provides an integration of the baseline benefit information and the new benefit information that has become available during the reporting interval, for authorised indications.

The level of detail provided in this sub-section should be sufficient to support the analysis of benefit-risk in section 18 ("Integrated benefit-risk analysis for authorised indications").

When there are no new relevant benefit data, this sub-section should provide a characterisation of the information in sub-section 17.1 ("Important baseline efficacy and effectiveness information").

When there is new positive benefit information and no significant change in the risk profile in this reporting interval, the integration of baseline and new information in this sub-section should be

succinct.

This sub-section should provide a concise but critical evaluation of the strengths and limitations of the evidence on efficacy and effectiveness, considering the following when available:

- a brief description of the strength of evidence of benefit, considering comparator(s), effect size, statistical rigor, methodological strengths and deficiencies, and consistency of findings across trials/studies;
- new information that challenges the validity of a surrogate endpoint, if used;
- clinical relevance of the effect size;
- generalisability of treatment response across the indicated patient population (e.g. information that demonstrates lack of treatment effect in a sub-population);
- adequacy of characterization of dose-response;
- duration of effect;
- comparative efficacy; and
- a determination of the extent to which efficacy findings from clinical trials are generalisable to patient populations treated in medical practice.

VII.B.5.18. PSUR section "Integrated benefit-risk analysis for authorised indications"

The marketing authorisation holder should provide in this PSUR section an overall appraisal of the benefit and risk of the medicinal product as used in clinical practice. Whereas sub-sections 16.4 ("Characterisation of risks") and 17.3 ("Characterisation of benefits") present the risks and benefits, this section should provide a critical analysis and integration of the key information in the previous sections and should not simply duplicate the benefit and risk characterisation presented in the sub-sections mentioned above.

VII.B.5.18.1. PSUR sub-section "Benefit-risk context - medical need and important alternatives"

This sub-section of the PSUR should provide a brief description of the medical need for the medicinal product in the authorised indications and summarised alternatives (medical, surgical or other; including no treatment).

VII.B.5.18.2. PSUR sub-section "Benefit-risk analysis evaluation"

A risk-benefit balance is specific to an indication and population. Therefore, for products authorised for more than one indication, risk-benefit balances should be evaluated and presented by each indication individually. If there are important differences in the risk-benefit balance among populations within an indication, the benefit-risk evaluation should be presented by population, if possible.

The benefit-risk evaluation should be presented and discussed in a way that facilitates the comparison of benefits and risks and should take into account the following points:

- Whereas previous sections/sub-sections should include all important benefit and risk

information, not all benefits and risks contribute importantly to the overall benefit-risk evaluation, therefore, the key benefits and risks considered in the evaluation should be specified. The key information presented in the previous benefit and risk section/sub-sections should be carried forward for integration in the benefit-risk evaluation.

- Consider the context of use of the medicinal product: the condition to be treated, prevented, or diagnosed; its severity and seriousness; and the population to be treated (relatively healthy; chronic illness, rare conditions).
- With respect to the key benefit(s), consider its nature, clinical importance, duration, and generalisability, as well as evidence of efficacy in non-responders to other therapies and alternative treatments. Consider the effect size. If there are individual elements of benefit, consider all (e.g. for therapies for rheumatoid arthritis: reduction of symptoms and inhibition of radiographic progression of joint damage).
- With respect to risk, consider its clinical importance, (e.g. nature of toxicity, seriousness, frequency, predictability, preventability, reversibility, impact on patients), and whether it arose from clinical trials in unauthorised indications or populations, off-label use, or misuse.
- The strengths, weaknesses, and uncertainties of the evidence should be considered when formulating the benefit-risk evaluation. Describe how uncertainties in the benefits and risks impact the evaluation. Limitations of the assessment should be discussed.

Provide a clear explanation of the methodology and reasoning used to develop the benefit-risk evaluation:

- The assumptions, considerations, and judgement or weighting that support the conclusions of the benefit-risk evaluation should be clear.
- If a formal quantitative or semi-quantitative assessment of benefit-risk is provided, a summary of the methods should be included.
- Economic considerations (e.g. cost-effectiveness) should not be considered in the benefit-risk evaluation.

When there is important new information or an ad hoc PSUR has been requested, a detailed benefit-risk analysis should be presented based on cumulative data. Conversely, where little new information has become available during the reporting interval, the primary focus of the benefit-risk evaluation might consist of an evaluation of updated interval safety data.

VII.B.5.19. PSUR section “Conclusions and actions”

A PSUR should conclude with the implications of any new information that arose during the reporting interval in terms of the overall evaluation of benefit-risk for each authorised indication, as well as for relevant subgroups, if appropriate.

Based on the evaluation of the cumulative safety data and the benefit-risk analysis, the marketing authorisation holder should assess the need for changes to the reference product information and propose changes as appropriate.

In addition and as applicable, the conclusions should include preliminary proposal(s) to optimise or further evaluate the risk-benefit balance for further discussion with the relevant medicines

authority(ies). This may include proposals for additional risk minimisation activities.

For products with a pharmacovigilance or risk management plan, the proposals should also be considered for incorporation into the pharmacovigilance plan and/or risk minimisation plan, as appropriate (see Module V).

Based on the evaluation of the cumulative safety data and the risk-benefit analysis, the marketing authorisation holder shall draw conclusions in the PSUR as to the need for changes and/or actions, including implications for the approved summary of product characteristics (SmPC) for the product(s) for which the PSUR is submitted.

Proposed changes to the reference product information should be described in this section of the PSUR. The national appendix should include proposals for product information (SmPC and package leaflet) together with information on ongoing changes when applicable.

VII.B.5.20. Appendices to the PSUR

A PSUR should contain the following appendices as appropriate, numbered as follows:

1. Reference information (see VII.B.4.).
2. Cumulative summary tabulations of serious adverse events from clinical trials; and cumulative and interval summary tabulations of serious and non-serious adverse reactions from post-marketing data sources.
3. Tabular summary of safety signals (if not included in the body of the report). It is preferred to include the tabulation of signals in the body of the PSUR, if feasible.
4. Listing of all the marketing authorisation holder-sponsored interventional and non-interventional studies with the primary aim of identifying, characterising, or quantifying a safety hazard or confirming the safety profile of the medicinal product, or of measuring the effectiveness of risk management measures, in case of non-interventional studies. Final study reports for those which were completed during the reporting interval should also be included as an **annex to the PSUR**.
5. List of the sources of information used to prepare the PSUR (when desired by the marketing authorisation holder).
6. National appendix:

   The requirements for the national appendix in the Arab Countries are provided in section VII.C.5.

VII.B.5.21. Mapping signals and risks to PSUR sections/sub-sections

The following flowchart (Figure VII.1) reflects the general location for the presentation of information on signals and risks within the PSUR.

Figure VII.1. PSUR Sections/subsections – signals and risks.

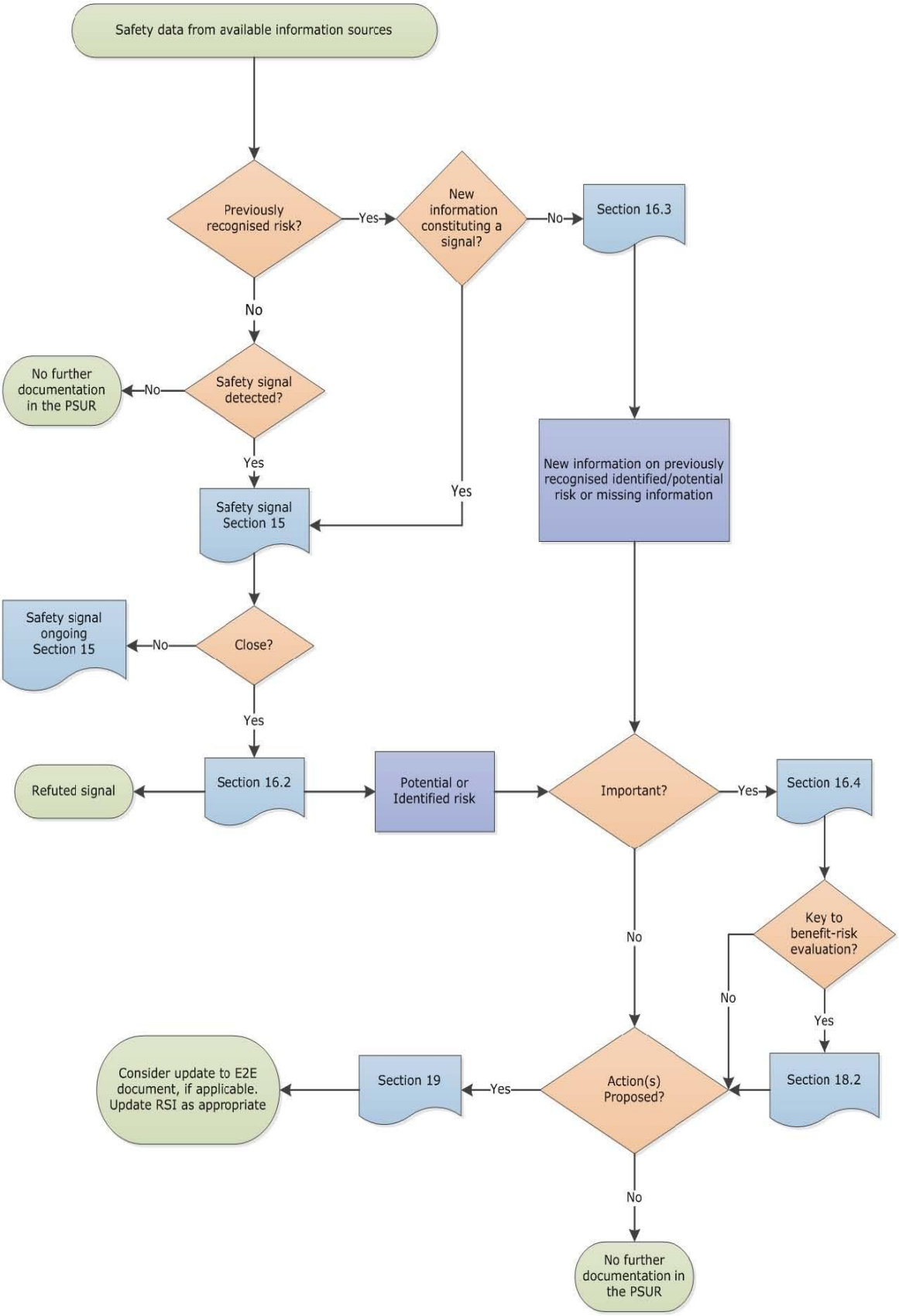

VII.B.6. Quality systems for PSURs at the level of marketing authorisation holders

Marketing authorisation holders should have in place structures and processes for the preparation, quality control, review and submission of PSURs including follow-up during and after their assessment. These structures and processes should be described by means of written policies and procedures in the marketing authorisation holder's quality system (see Module I).

There are a number of areas in the pharmacovigilance process that can directly impact the quality of PSURs, some examples are case management of spontaneous and study reports, literature screening, signal management, additional pharmacovigilance and post-marketing research activities, procedures for integration of information on benefits and risks from all available data sources and maintenance of product information. The quality system should describe the links between the processes, the communication channels and the responsibilities with the aim of gathering all the relevant information for the production of PSURs. There should be documented procedures including quality control checks in place to check the accuracy and completeness of the data presented in the PSURs. In ensuring completeness of data, a documented template or plan for drawing data from various data sources could be developed. The importance of an integrated approach to benefit-risk evaluation should underpin processes and cross departmental input to PSUR preparation.

The PSUR should also contain the assessment of specific safety issues requested by medicines authorities in accordance with agreed timelines and procedures. The marketing authorisation holder should have mechanisms in place to ensure that the requests made by medicines authorities during the time of their PSUR assessment are properly addressed.

The provision of the data included in the summary tabulations (see VII.B.5.6.) should undergo source data verification against the marketing authorisation holder's safety database to ensure accuracy of the number of events/reactions provided. The process for querying the safety database, the parameters used for the retrieval of the data and the quality control performed should be properly documented.

An appropriate quality system should be in place in order to avoid failure to comply with PSUR requirements such as:

- non-submission: complete non-submission of PSURs, submission outside the correct submission schedule or outside the correct time frames (without previous agreement with the medicines authorities);
- unjustified omission of information required by VII.B.5.;
- poor quality reports: poor documentation or insufficient information or evaluation provided to perform a thorough assessment of the new safety information, signals, risk evaluation, benefit evaluation and integrated benefit-risk analysis, misuse not highlighted, absence of use of standardised medical terminology (e.g. MedDRA) and inappropriate dismissal of cases with no reported risk factors in cumulative reviews;
- submission of a PSUR where previous requests from medicines authorities have not been addressed;

- failure to provide an explicit evaluation of the risk-benefit balance of the medicinal product;
- failure to provide adequate proposals for the local authorised product information.

Any significant deviation from the procedures relating to the preparation or submission of PSURs should be documented and the appropriate corrective and preventive action should be taken. This documentation should be available at all times.

When marketing authorisation holders are involved in contractual arrangements (e.g. licensor-licensee), respective responsibilities for preparation and submission of the PSUR to the medicines authorities should be clearly specified in the written agreement.

When the preparation of the PSUR is delegated to third parties, the marketing authorisation holder should ensure that they are subject to a quality system compliant with the current legislation. Explicit procedures and detailed agreements should exist between the marketing authorisation holder and third parties. The agreements may specifically detail the options to audit the PSUR preparation process.

VII.B.7. Training of staff members related to the PSUR process

For all organisations, it is the responsibility of the person responsible for the pharmacovigilance system to ensure that the personnel, including pharmacovigilance, medical and quality personnel involved in the preparation, review, quality control, submission and assessment of PSURs are adequately qualified, experienced and trained according to the applicable guidelines (e.g. ICH E2C(R2) and this GVP Module VII). When appropriate, specific training for the different processes, tasks and responsibilities relating to the PSUR should be in place.

Training to update knowledge and skills should also take place as necessary.

Training should cover legislation, guidelines, scientific evaluation and written procedures related to the PSUR process. Training records should demonstrate that the relevant training was delivered prior to performing PSUR-related activities.

VII.C. Operation of PSURs in the Arab Countries

VII.C.1. Routine submission of PSURs in the Arab Countries

Taking into consideration the following about the PSUR:

- The main objective of a PSUR is to present a comprehensive, concise and critical analysis of the risk-benefit balance of the medicinal product taking into account **all** new or emerging information (from **all countries** in which the product is authorised) in the context of cumulative information on risks and benefits;
- The required format and content of PSURs in EU and in the Arab Countries are based on those for the Periodic Benefit Risk Evaluation Report (PBRER) described in the ICH-E2C(R2) guideline.

Accordingly, the PSUR can be described as a global pharmacovigilance document (worldwide

information and same format & content) hence, the same PSUR is submitted to several authorities worldwide.

Therefore for the purpose of not reinventing the wheel and as this guideline was based on the European Good Pharmacovigilance Practice; the "list of EU reference dates" (EURD) is adopted in the context of this guideline. Hence the PSURs submitted in the Arab Countries shall follow the dates & frequency stated in the most updated version of the list; this does not undermine the right of a national medicines authority in the Arab Countries to request the submission of PSURs at any time or to change as appropriate the submission frequency on the national level.

For active substances or combination of active substances not included in the EURD list see VII.C.1.2.2.

The following subsections define the "EU reference dates list" and its process in the EU with the purpose to provide more understanding about it and how the same list will be adopted and applied in the Arab Countries.

VII.C.1.1. List of European Union reference dates and frequency of submission of PSURs[45]

VII.C.1.1.1. Objectives of the "EU reference dates list"

The European Medicines Agency (EMA) shall make public a list of Union reference dates (hereinafter referred to as list of EU reference dates or EURD list) and frequency of submission of PSURs by means of the European medicines web-portal.

The objectives of the list of EU reference dates and frequency of submission of PSURs are:

- Harmonisation of data lock point and frequency of submission of PSURs for the same active substance and combination of active substances:

  For medicinal products containing the same active substance or combination of active substances, an EU reference date should be set up and the frequency and date of submission of PSURs harmonised in order to allow the preparation of a single assessment. Such information should be included in the published list.

- Optimisation of the management of PSURs and PSURs assessments:

  The list overrules the submission schedule described in the old regulations and guidelines.

  For active substances or combinations of active substances included in the list, marketing authorisation holders shall vary, if applicable according to the national regulation, the condition laid down in their marketing authorisations in order to allow the submission of PSURs in accordance to the frequency and submission date as indicated in the list.

  The periodicity is defined on the basis of a risk-based approach in order to prioritise the periodic re-evaluation of the risk-benefit balance of active substances in a way that best protects public

[45] The initial EU reference dates list was adopted by the EMA in September 2012 and was published on 01 October 2012.

health.

- Single assessment and reassessment of the risk-benefit balance of an active substance based on all available safety data:

  The list enables the harmonisation of PSUR submissions for medicinal products containing the same active substance or the same combination of active substances.

  A single PSUR assessment provides a mechanism for evaluating the totality of available data on the benefits and risks of an active substance or combination of active substances. This single assessment on the national level is important in avoiding duplication of efforts and in prioritising the use of limited resources.

VII.C.1.1.2. Description of the "EU reference dates list"

The list of EU reference dates and frequency of submission of PSURs consists of a comprehensive list of substances and combinations of active substances- in alphabetical order- for which PSURs shall be submitted in accordance with the EU reference date and the frequency as determined in the list. The list is updated in line with the “list of all medicinal products for human use authorised in the EU.

The EU reference dates list should contain the following information:

- the EU reference dates;
- the frequencies of submission of PSURs;
- the data lock points of the next submissions of PSURs;
- the next submission date has been included to support MAHs’ planning in terms of the PSUR submission and ensure that all relevant PSURs are received prior to the start of the assessment procedure
- the date of publication (on the European Medicines web-portal) of the frequency for PSURs submission and data lock point for each active substance and combination of active substances. Any change to the dates of submission and frequency on PSURs specified in the marketing authorisation shall take effect 6 months after the date of such publication.

Where specificity is deemed necessary, the list should include the scope of the PSUR and related single assessment procedure such as:

- whether or not it should cover all the indications of the substance or combination of active substances;
- whether or not it should cover all the formulations/routes of administration of the products containing a substance or combination of active substances;

VII.C.1.1.3. Criteria used for defining the frequency of submission of PSURs

The following prioritisation criteria should be taken into account when defining the frequency of submission for a given active substance or combination of active substances:

- information on risks or benefits that may have an impact on the public health;
- new product for which there is limited safety information available to date (includes pre- and

post-authorisation experiences);

- significant changes to the product (e.g. new indication has been authorised, new pharmaceutical form or route of administration broadening the exposed patient population);
- vulnerable patient populations/poorly studied patient populations, missing information (e.g. children, pregnant women) while these populations are likely to be exposed in the post-authorisation setting;
- signal of/potential for misuse, medication error, risk of overdose or dependency;
- the size of the safety database and exposure to the medicinal product;
- medicinal products subjected to additional monitoring.

Any change in the criteria listed above for a given active substance or combination of active substances may lead to an amendment of the list of EU reference dates (e.g. increase of the frequency for PSUR submission).

VII.C.1.1.4. Maintenance of the list of EU reference dates

The maintenance of the list of EU reference dates should facilitate regulatory responsiveness to public health concerns and therefore the list will be subject to changes to reflect the decisions taken (e.g. following signal detection).

The information included in the list such as the active substances and combinations of active substances, the frequencies of submission of PSURs and data lock points may need to be updated when considered necessary. Changes to the list may be applied on one of the following grounds:

- emergence of new information that might have an impact on the risk-benefit balance of the active substances or combinations of active substances, and potentially on public health;
- any change in the criteria used for the allocation of frequency for PSUR submission and defined under VII.C.1.1.3.;
- active substance newly authorised.

VII.C.1.2. Application of the "list of EU reference dates" to the routine submission of PSURs in the Arab Countries

VII.C.1.2.1. Submission of PSURs for medicinal products: general requirement

Figure VII.2. presents the various potential scenarios for the submission of a PSUR as a general requirement.

Figure VII.2. Conditions for PSURs submission as general requirement

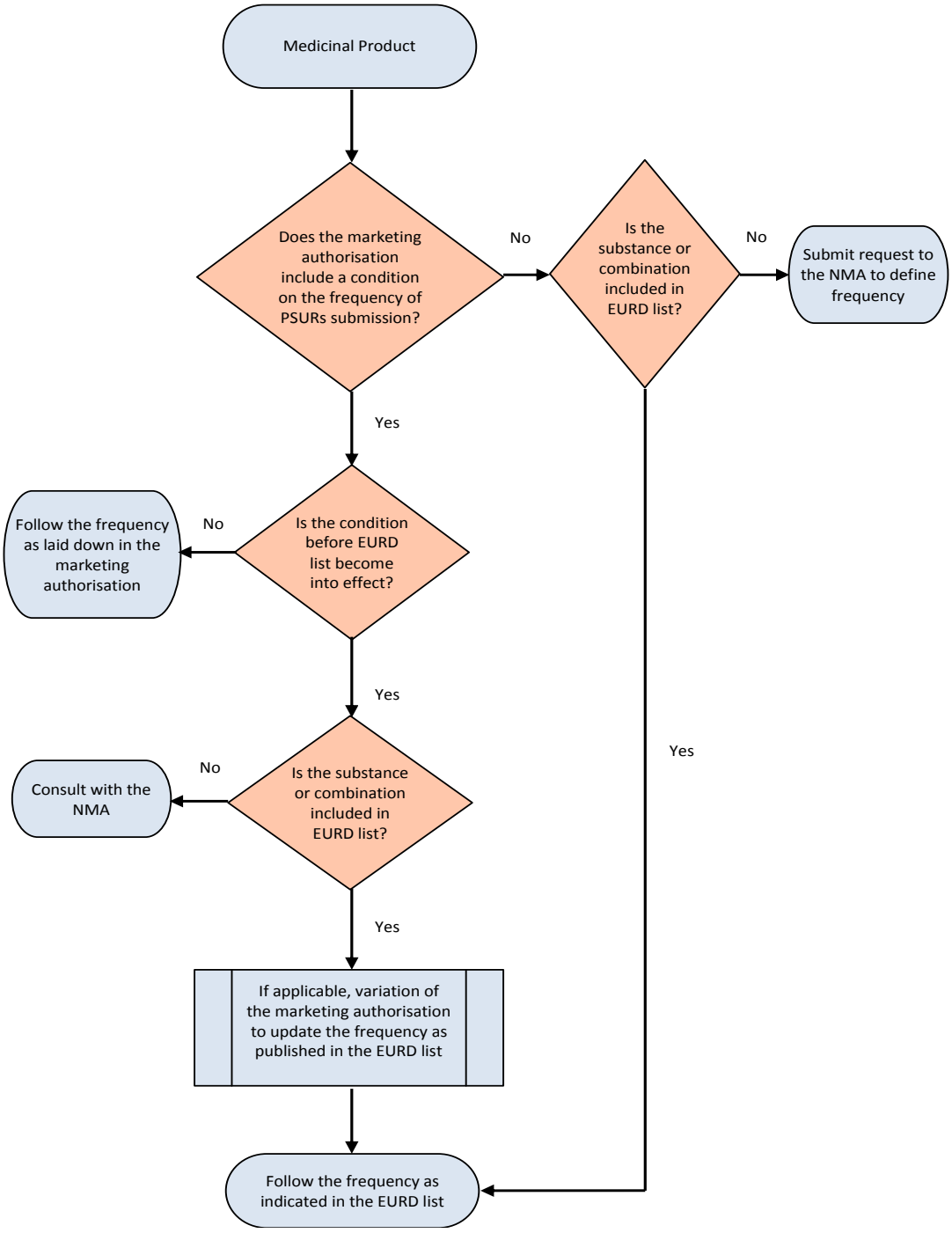

The data lock points included in the "list of EU references dates" enable the synchronisation of PSURs submission and permit the single assessment on the national level. These data lock points are fixed on a certain date of the month, and should be used to determine the submission date of the PSUR.

Unless otherwise specified in the list of EU reference dates and frequency of submission, or agreed with national medicines authority in the Arab country concerned, as appropriate, a single PSUR shall be prepared for all medicinal products containing the same active substance and authorised for one marketing authorisation holder. The PSUR shall cover all indications, routes of administration,

dosage forms and dosing regimens, irrespective of whether authorised under different names. Where relevant, data relating to a particular indication, dosage form, route of administration or dosing regimen shall be presented in a separate section of the PSUR and any safety concerns shall be addressed accordingly.

The adoption of the list of EU reference dates for the submission of PSURs in Arab Countries does not undermine the right of a national medicines authority in the Arab Countries to request the submission of PSURs at any time or to change as appropriate the submission frequency on the national level.

VII.C.1.2.2. Submission of PSURs in case of active substances not included in the EURD list

For medicinal products containing an active substance or a combination of active substances NOT included in the EU reference dates list, PSURs shall be submitted according to the PSUR frequency defined in the marketing authorisation or if not specified, the MAH shall submit request to the national medicines authority in the Arab Country concerned to define the frequency and dates of submission of PSURs. See figure VII.2.

The national medicines authorities should maintain a track for those active substance and their defined frequencies & dates as a complementary to the EURD list. In addition, the national medicines authority should generalise those frequencies & dates for other national medicines containing the same active substance or a combination of active substances to support the "national PSUR single assessment" procedure.

The national medicines authority in the Arab Country concerned may use (if no specific concern about the safety) the following standard submission schedule to define the frequency & date of PSURs submission for those substances:

- at 6 months intervals once the product is authorised, even if it is not marketed;
- once a product is marketed, 6 monthly PSUR submission should be continued following initial placing on the market for 2 years, then once a year for the following 2 years and thereafter at 3-yearly intervals.

VII.C.1.2.3. Medicinal products with conditioned PSURs submission frequency in the marketing authorisation

Authorised medicinal product for which the frequency and dates of submission of PSURs are laid down as a condition in its marketing authorisation; see figure VII.2.

- if this conditioned marketing authorisation is granted **BEFORE** the EURD list becomes into effect in the Arab Country concerned, and, if the active substance or a combination of active substances of this product is included in the "EU reference dates list", then the MAH should submit variation -as appropriate- to update the frequency as published in the EURD list.
- if this conditioned marketing authorisation is granted **AFTER** the EURD list becomes into effect in the Arab Country concerned, then the MAH should follow the frequency laid down in the marketing authorisation.

  Afterward, any changes to the dates and frequencies of submission of PSURs specified in the list take effect six months after the date of the publication. Where appropriate, marketing

authorisation holders shall submit the relevant variation in order to reflect the changes in their marketing authorisation, unless the marketing authorisation contains a direct cross reference to the list of EU references dates adopted in the Arab Countries.

VII.C.1.2.4. Submission of PSURs for generic, well-established use, traditional herbal and homeopathic medicinal products

As a general rule, PSURs for these kind of medicinal products are required to be submitted in the Arab Countries (unless otherwise is announced by the national medicines authority in each Arab Country).

The **multinational** marketing authorization holders for any of these kinds of medicinal products which **sometimes** are exempted from submitting PSURs routinely for these products in the European Union; should be attentive to the national requirements in the Arab Countries as this European exemption is NOT applied in the Arab Countries (unless otherwise is announced by the national medicines authority).

If for any reason the PSURs of some of these products are no longer required by the national medicines authority in any Arab Country to be submitted routinely, it is expected that marketing authorisation holders will continue to evaluate the safety of their products on a regular basis and report any new safety information that impacts on the risk-benefit balance or the product information (See Module VI and Module IX).

VII.C.1.2.5. Submission of PSURs for fixed dose combination products

Unless otherwise specified in the "list of EU reference dates and frequency of submission", if the substance that is the subject of the PSUR is also authorised as a component of a fixed combination medicinal product, the marketing authorisation holder shall either submit a separate PSUR for the combination of active substances authorised for the same marketing authorisation holder with cross-references to the single-substance PSUR(s), or provide the combination data within one of the single-substance PSURs.

VII.C.1.2.6. Publication of the list

Upon its publishing on the European medicines web-portal, the list of EU reference dates and frequency of submission of PSURs should be published on the official websites of the national medicines authorities in the Arab Countries.

The list is expected to be updated and published monthly by the EMA. The updated list should also then be adopted and published on the official websites of the national medicines authorities in the Arab Countries.

VII.C.2. Submission of PSURs on demand of a medicines authority in an Arab Country (ad hoc request)

In addition to the routine PSUR submission, marketing authorisation holders shall submit PSURs immediately upon ad hoc request from a medicines authority in an Arab Country. When the timeline for submission has not been specified in the request, marketing authorisation holders should submit

the PSUR within 90 calendar days of the data lock point.

VII.C.3. Timelines for PSUR submission

Each marketing authorisation holder shall be responsible for submitting PSURs for its own products to the national medicines authorities in the Arab Countries according to the following timelines:

- within 70 calendar days of the data lock point (day 0) for PSURs covering intervals up to 12 months (including intervals of exactly 12 months); and
- within 90 calendar days of the data lock point (day 0) for PSURs covering intervals in excess of 12 months;
- the timeline for the submission of ad hoc PSURs requested by national medicines authorities will normally be specified in the request, otherwise the ad hoc PSURs should be submitted within 90 calendar days of the data lock point.

VII.C.4. Process for PSUR Assessment in the Arab Countries

VII.C.4.1. PSUR assessment by national medicines authorities

It is the responsibility of the national medicines authority in the Arab country where the products are authorised to evaluate the PSURs for these medicinal products to determine whether there are new risks or whether risks have changed or whether there are changes to the risk-benefit balance of the medicinal products. This assessment is conducted in accordance with the national regulations through the "PSUR single assessment" procedure which means the assessment of all PSURs for medicinal products containing the same active substance or the same combination of active substances whether or not held by the same marketing authorisation holder and for which the frequency and dates of submission of PSURs have been harmonised (refer to the list of EU reference dates which is adopted in the Arab countries).

At PSUR receipt, the national medicines authority should perform a technical validation of the report to ensure that the PSUR application is in a suitable format.

For each Arab Country, upon establishment of the list of all medicinal products for human use authorised in it and in the context of the "PSUR single assessment" procedure, the national medicines authority should ensure that all marketing authorisation holder(s) of the given substance in their country have submitted PSUR(s), as required. In the event where a PSUR has not been submitted -which indeed considered a non-compliance of the MAH-, the national medicines authority should contact the concerned marketing authorisation holder(s). However, this will not preclude the start of the single assessment procedure for other PSUR(s) of the same active substance.

Data of individual cases from “National Pharmacovigilance and Safety reports database”may be retrieved to support the PSUR assessment.

During the assessment, additional listings of individual cases may be requested in the context of the PSUR assessment procedure for adverse reactions of special interest and should be provided by the marketing authorisation holder within an established timeframe to be included in the request. This

may be accompanied by a request for an analysis of individual case safety reports, (including information on numbers of cases, details of fatal cases and as necessary, analysis of non-serious cases), where necessary for the scientific evaluation. Information on the context or rationale for the request should generally be provided.

Following the assessment of PSURs, the medicines authority in the Arab Country should consider whether any action concerning the marketing authorisation for the medicinal products containing the concerned active substance or combination of active substances is necessary (e.g. add a new contraindication, a restriction of the indication or a reduction of the recommended dose, the need to conduct a post-authorisation safety study, request an update of the RMP, review of safety issues and/or close monitoring of events of interest …etc). The national medicines authority should vary, suspend or revoke the marketing authorization when applicable according to the appropriate procedure at national level.

Furthermore, marketing authorisation holders are reminded of their obligation to keep their marketing authorisation up to date.

Amendments to the SmPC, package leaflet and labelling as a result of the PSUR assessment should be implemented through the appropriate variation.

When the proposals for the product information include new adverse reactions in section 4.8 ("Undesirable effects") of the SmPC, or modifications in the description, frequency and severity of the existing reactions, marketing authorisation holders should provide in the relevant sections of the PSUR appropriate information to allow the adequate description and classification of the frequency of the adverse reactions. If other sections of the SmPC (e.g. SmPC section 4.4 "Special warnings and precautions for use") are considered to be updated, clear proposals should be provided for the medicines authorities in the Arab Country concerned to consider during the PSUR assessment. The proposals should be included in the PSUR national appendix (VII.C.5.).

The outcome of the PSUR assessment should incorporate the new safety warnings and key risk minimisation recommendations, arising from the assessment of the data in the PSUR, to be included in the relevant sections of the product information.

The assessment results and conclusions of the medicines authority in the Arab Country should be provided to the marketing authorisation holder.

VII.C.4.2. Relationship between PSUR and risk management plan

The general relationship between the risk management plan (RMP) and the PSUR is described in Module V, while an overview of the common RMP/PSUR modules is provided in below.

During the preparation of a PSUR, the marketing authorisation holder should consider whether any identified or potential risks discussed within the PSUR is important and requires an update of the RMP. In these circumstances, updated revised RMP including the new important safety concern should be submitted with the PSUR and assessed in parallel.

If important safety concerns are identified by the national medicines authorities in the Arab Countries during the assessment of a PSUR and no updated RMP or no RMP has been submitted, recommendations should be made to submit an update or a new RMP within a defined timeline.

VII.C.4.2.1. PSUR and risk management plan – common modules

The proposed modular formats for the PSUR and the RMP aim to address duplication and facilitate flexibility by enabling common PSUR/RMP sections to be utilised interchangeably across both reports. Common sections with the above mentioned reports are identified in Table VII.1.:

Table VII.1. Common sections between PSUR and RMP

PSUR section	RMP section
Section 3 – "Actions taken in the reporting interval for safety reasons"	Part II, module SV – "Post-authorisation experience", section "Regulatory and marketing authorisation holder action for safety reason"
Sub-section 5.2 – "Cumulative and interval patient exposure from marketing experience"	Part II, module SV – "Post-authorisation experience", section "Non-study post-authorisation exposure"
Sub-section 16.1 – "Summary of safety concerns"	Part II, module SVIII – "Summary of the safety concerns" (as included in the version of the RMP which was current at the beginning of the PSUR reporting interval)
Sub-section 16.4 – "Characterisation of risks"	Part II, Module SVII – "Identified and potential risks"
Sub-section 16.5 – "Effectiveness of risk minimisation (if applicable)"	Part V – "Risk minimisation measures", section "Evaluation of the effectiveness of risk minimisation activities"

VII.C.5. National appendix requirements for periodic safety update reports

The scientific evaluation of the risk-benefit balance of the medicinal product included in the PSUR detailed in VII.B.5. shall be based on all available data, including data from clinical trials in unauthorised indications and populations.

The **multinational** marketing authorization holders should be attentive to this requirement in the Arab Countries and to prepare & submit the national appendix relevant to the Arab Country in which the PSUR will be submitted, i.e. **multinational** MAH shall submit the PSUR with relevant national appendix as well as the EU-regional appendix of the PSUR submitted in EU as appropriate.

This national appendix should include the following:

VII.C.5.1. PSUR national appendix, sub-section "Current national product information"

- This section should contain a clean copy of the national product information approved in the Arab Country concerned and which is in effect at the end of the reporting interval.
- A clean copy of all versions of the reference product information in effect at the end of the reporting interval (e.g. different formulations included in the same PSUR) were provided in

appendix 1 of the PSUR (see VII.B.5.20.). **When a meaningful differences exist between this reference safety information (e.g. CCDS or CCSI) and the safety information in the national product information** (national SmPC and package leaflet) **approved in the Arab Country concerned, a brief comment should be prepared by the company, describing these local differences with track change version.**

- The reference product information document should list all authorised indications in ICH countries or regions. When there are additional locally authorised indications in the Arab Country concerned, these indications may be either added to the reference product information or handled in the national appendix as considered most appropriate by the marketing authorization holder and the national medicines authority in the concerned country.

VII.C.5.2. PSUR national appendix, sub-section "Proposed product information"

The assessment of the need for amendments to the product information is incorporated within the PSUR assessment procedure. The regulatory opinion should include recommendations for updates to product information where needed. Marketing authorisation holders should provide the necessary supportive documentation and references within the PSUR or in this appendix to facilitate this.

Within the PSUR, the marketing authorisation holder is required to consider the impact of the data and evaluations presented within the report, on the marketing authorisation. Based on the evaluation of the cumulative safety data and the risk-benefit analysis, the marketing authorisation holder shall draw conclusions in the PSUR as to the need for changes and/or actions, including implications for the approved SmPC(s) for the product(s) for which the PSUR is submitted.

In this sub-section, the marketing authorisation holder should provide the proposals for product information (SmPC and package leaflet) based on the above mentioned evaluation. These should be based on all authorised indications in the Arab Country concerned.

A track change version of the proposed SmPCs and package leaflets based on the assessment and conclusions of the PSUR should be provided.

All the SmPCs and packages leaflets covered by the PSUR and in effect at the data lock point, should be reviewed to ensure that they reflect the appropriate information according to the cumulative data included and analysed in the PSUR.

Amendments to the product information should not be postponed or delayed until the PSUR submission and amendments not related to the information presented in the PSUR, should not be proposed within the PSUR procedure. It is the obligation of the marketing authorisation holder to submit a variation in accordance with the national regulation on variations to the terms of a marketing authorisation.

A brief description of ongoing procedures (e.g. variations) to update the product information should be provided in this section.

VII.C.5.3. PSUR national appendix, sub-section "Proposed additional pharmacovigilance and risk minimisation activities"

This sub-section should include proposals for additional pharmacovigilance and additional risk minimisation activities based on the conclusions and actions of the PSUR, including a statement of the intention to submit a RMP or an updated RMP when applicable.

VII.C.5.4. PSUR national appendix, sub-section "Summary of ongoing safety concerns"

In order to support the information provided in the PSUR section 16.1 "Summary of safety concerns" (see VII.B.5.16.1.), Table "Summary – Ongoing safety concerns" should be included in this PSUR sub-section. This table should be extracted from the version of RMP available **at the beginning** of the PSUR reporting interval (see Module V).

VII.C.5.5. PSUR national appendix, sub-section "Worldwide marketing authorisation status table"

In addition to PSUR section worldwide marketing authorisation status (VII.C.B.5.2.), a **cumulative table** with the following information should be provided for any indication, for **all countries** where a regulatory decision about marketing authorization has been made related to the following:

- Dates of 1st marketing authorisation approval (where PSURs are common for identical products with different invented names, or in the case of generic medicinal products, the list of the dates should cover all products separately). Or date of application in case the entry is related to a refusal of marketing authorisation application;
- Countries (worldwide) in which the medicinal product was authorized
- Local product trade name(s)
- Dosage form
- Treatment indications and special populations covered by the market authorisation, when relevant. Any qualifications surrounding the authorisation, such as limits on indications if relevant to safety;
- Current authorization status; authorized, withdrawn or suspended (if other term is used; a definition of this term should be provided according to the regulation in the country in which this action has been taken). In addition, <u>explanation</u> shall be provided in case of <u>any type of lack of approval</u>;
- Dates when the marketing authorisation has been withdrawn or dates when the marketing authorisation has been suspended either by a regulatory authority or voluntarily by the MAH;
- Current marketing status; marketed, not marketed or never launched. In addition, the date of such status shall be provided (where PSURs are common for identical products with different invented names or in the case of generics, the listing of the dates should cover separately all products);
- Withdrawal of an application for authorisation or refusal of granting the authorisation; <u>explanation</u> shall be provided;

Entries should be listed in chronological order of 1st regulatory authorizations. For multiple authorizations in the same country (e.g., new dosage forms), the IBD for the active substance and for all PSURs should be the first (initial) authorization date.

This is a cumulative table; accordingly entries must not be removed from the table e.g. if the product in no more authorized; instead MAH shall changes the relevant information in table. Fictious examples for different cases are shown on the table below

1st approval date/ application date	Country	Local trade name	Dosage form	Indication	Current authorisation status	Date	Current marketing status & date	application refusal (if any)	Refusal date	Comments/ explanation
2-3-1990	**UK**	**<name>**	**Tablet**	**<indication>**	**authorised**	**2-3-1995 renewal**	**Marketed 7-9-1990**			
9-1-1991	**France**	**<name>**	**Tablet**	**<indication>**	**withdrawn**	**4-6-2000**				**<reason for withdrawal>**
4-9-1991	**KSA**	**<name>**	**Tablet**	**<indication>**	**suspended**	**5-8-1998**				**<reason for suspension>**
4-5-2005	**Japan**	**<name>**	**Capsule**	**<indication>**				**refused**	**9-11-2005**	**<reason for refusal>**
3-1-2007	**Egypt**	**<name>**	**Tablet**	**<indication>**	**authorised**		**Not marketed 4-8-2010**			**<reason for not marketing>**
1-3-2009	**Jordon**	**<name>**	**Tablet**	**<indication>**	**authorised**		**Never launched**			**<reason for not launched>**

Typically, indications for use, populations treated (e.g. children vs. adults) and dosage forms will be the same in many or even most countries where the product is authorised. However, when there are important differences, which would reflect different types of patient exposure, such information should be noted. This is especially true if there are meaningful differences in the newly reported safety information that are related to such different exposures.

If more convenient and useful, separate regulatory status tables for different product uses or forms should be utilized.

VII.C.6. Quality systems and record management systems for PSURs in the Arab Countries

VII.C.6.1. Quality systems and record management systems at the level of the marketing authorisation holder

Specific quality system procedures and processes shall be in place in order to ensure the update of product information by the marketing authorisation holder in the light of scientific knowledge, including the assessments and recommendations.

It is the responsibility of the marketing authorisation holder to check regularly the list of EU reference dates and frequency of submission (adopted also by Arab Countries) published in the official website of each national medicines authority in Arab countries/ EMA website to ensure compliance with the PSUR reporting requirements for their medicinal products (see VII.C.1.).

Systems should be in place to schedule the production of PSURs according to:

- the list of EU reference dates and frequency of PSURs submission; or
- the conditions laid down in the national marketing authorisation; or
- as defined by the national medicines authority in the Arab Country concerned as applicable (without any conditions in their marketing authorisation or not included in the list of EU references dates and frequency of submission; or
- ad hoc requests for PSURs by a medicines authority in an Arab Country.

For those medicinal products where the submission of an RMP is not required, the marketing authorisation holder should maintain on file a specification of important identified risks, important potential risks and missing information in order to support the preparation of the PSURs.

The marketing authorisation holder should have procedures in place to follow the requirements established by the medicines authority(ies) in the Arab Country(s) concerned for the submission of PSURs.

The QPPV shall be responsible for the establishment and maintenance of the pharmacovigilance system and therefore should ensure that the pharmacovigilance system in place enables the compliance with the requirements established for the production and submission of PSURs. In relation to the medicinal products covered by the pharmacovigilance system, specific additional responsibilities of the QPPV in relation to PSURs should include:

- ensuring the necessary quality, including the correctness and completeness, of the data submitted in the PSURs;
- ensuring full response according to the timelines and within the procedure agreed (e.g. next PSUR) to any request from the national medicines authorities in Arab Countries concerned related to PSURs;
- awareness of the PSUR and assessment report conclusions and the decisions of the concerned national medicines authority in order to ensure that appropriate action takes place.

The record retention times for product-related documents in Module I also apply to PSURs and source documents related to the creation of PSURs, including documents related to actions taken for safety reasons, clinical trials and post-authorisation studies, relevant benefit information and documents utilised for the calculation of patient exposure.

VII.C.6.2. Quality systems and record management systems at the level of the medicines authorities in Arab Countries

Each medicines authority in the Arab Countries shall have in place a pharmacovigilance system for the surveillance of medicinal products and for receipt and evaluation of all pharmacovigilance data including PSURs. For the purpose of operating its tasks relating to PSURs in addition to the pharmacovigilance system the national medicines authorities in Arab Countries should implement a quality system (see Module I).

National medicines authorities in the Arab Countries should monitor marketing authorisation holders for compliance with regulatory obligations for PSURs. Additionally, medicines authorities should take in cases of non-compliance the appropriate regulatory actions as required (e.g. variation, suspension or revocation…etc). Medicines authorities in Arab Countries may exchange information in case of MAH non-compliance.

Where MAH's tasks related to PSUR procedures are delegated to third parties, the national medicines authorities in Arab Countries should ensure that they are subject to a quality system in compliance with the obligations provided by the national regulation/legislation.

The national medicines authorities should have in place a process to technically validate the completeness of PSUR submissions.

Data from the “National Pharmacovigilance and Safety reports database” (e.g. line listings and summary tabulations) should be retrieved and utilised as appropriate to support the PSUR assessment.

Written procedures should reflect the different steps to follow for the maintenance and publishing of the list of dates and frequency of submission of PSURs.

The record retention times for product-related documents in Module I also apply to PSUR- system related documents (e.g. standard operating procedures) and PSUR -related documents (e.g. PSURs, assessment reports, the data retrieved from the “National Pharmacovigilance and Safety reports database” or other data used to support the PSUR assessment).

VII.C.7. Renewal of marketing authorisations

Marketing authorisations need to be renewed after 5 years or 10 years (may differ in some Arab Countries; check the national regulations) on the basis of a re-evaluation of the risk-benefit balance in order to continue to be valid to place the product on the market.

Conditional marketing authorisations should be renewed annually. For further details on the procedure and the documentation to be submitted refer to the national regulations & guidance in each Arab Country consult the national medicines authority.

No PSURs, addendum reports and summary bridging reports should be submitted within the

renewal application. The clinical overview should include an **addendum** containing the relevant sections for the re-assessment of the risk-benefit balance of the medicinal product. These sections are identified below.

Addendum to Clinical Overview:

A critical discussion addressing the current benefit/risk balance for the product on the basis of a consolidated version of safety/efficacy data accumulated since the initial MAA or the last renewal, taking into account Periodic Safety Update Reports (PSURs) submitted, suspected adverse reactions reports, additional pharmacovigilance activities and the effectiveness of risk minimisation measures contained in the RMP, if applicable. In addition, it should make reference to any relevant new information in the public domain e.g. literature references, clinical trials and clinical experience, new treatments available, which may change the outcome of the benefit/risk evaluation at the time of the original authorisation or last renewal.

The information shall include both positive and negative results of clinical trials and other studies in all indications and populations, whether or not included in the marketing authorisation, as well as data on the use of the medicinal product where such use is outside the terms of the marketing authorisation.

This Addendum should be signed and accompanied by the CV of the expert. The clinical expert should have the necessary technical or professional qualifications and may, but should not necessarily, be the same qualified person responsible for pharmacovigilance.

In any event, a clear conclusive statement is required from the clinical expert (detailed below).

The Addendum to the Clinical Overview should contain the following information**:

- History of pharmacovigilance system inspections (date, inspecting authority, site inspected, type of inspection and if the inspection is product specific, the list of products concerned) and an analysis of the impact of the findings overall on the benefit/risk balance of the medicinal product.
- Worldwide marketing authorisation status: overview of number of countries where the product has been approved and marketed worldwide.
- Actions taken for safety reasons (worldwide) during the period covered since the initial marketing authorisation or since the last renewal until 90 days prior to renewal submission: description of significant actions related to safety that had a potential influence on the benefit-risk balance of the approved medicinal product (e.g. suspension, withdrawal, temporary halt or premature ending of clinical trial for safety reasons, issue requiring communication to healthcare professionals…).
- Significant changes made to the Reference Information (RI) during the period covered since the initial marketing authorisation or since the last renewal. A track changes version of the document identifying the changes made during the period covered since the initial marketing authorisation or since the last renewal should also be provided until 90 days prior to renewal submission.
- Meaningful differences between the RI and the proposals for the Summary of Product Characteristics. A proposed SmPC, Package leaflet and Labelling should also be provided
- Estimated exposure and used patterns: data on cumulative exposure of subjects in clinical trials as well as of patients from marketing exposure. If the marketing authorisation holder becomes

aware of a pattern of use of the medicinal product considered relevant for the implementation of the safety data, a brief description should be provided; such patterns may include in particular off-label use.

- Data in summary tabulations: Summary tabulations of serious adverse events from clinical trials as well as summary tabulations of adverse reactions from post-marketing data sources reported during the period covered since the initial marketing authorisation or since the last renewal until 90 days prior to renewal submission.
- Summaries of significant safety and efficacy findings from clinical trials and non-interventional studies: description of any significant safety findings that had an impact on the conduct of clinical trials or non-interventional studies. It should also address whether milestones from post-authorisation safety studies, post-authorisation efficacy studies, studies from the RMP pharmacovigilance plan and studies conducted as condition and obligations of the marketing authorisation, have been reached in accordance with agreed timeframes.
- Literature: review of important literature references published during the period covered since the initial marketing authorisation or since the last renewal until 90 days prior to renewal submission that had a potential impact on the benefit/risk of the medicinal product.
- Risk evaluation: the MAH should summarise any information related to important safety issues, evaluation and characterisation of risks as well as effectiveness of risk minimisations for the period covered since the initial marketing authorisation or since the last renewal until 90 days prior to renewal submission.
- Benefit evaluation: the MAH should summarise important efficacy and effectiveness information (including information on lack of efficacy) for the period covered since the initial marketing authorisation or since the last renewal until 90 days prior to renewal submission.
- Benefit-risk balance: a discussion on the benefit-risk balance for the approved indication should be presented, based on the above information.
- Late-breaking information: The MAH should summarise the potentially important safety, efficacy and effectiveness findings that arise after the data lock point but during the period of preparation of the addendum to the clinical overview.

** Marketing authorisation holders are advised to consider the Good Vigilance Practice Module on PSURs as guidance for the preparation of the above sections of the clinical overview.

<u>The Clinical Expert Statement should:</u>

- Confirm that no new clinical data are available which change or result in a new risk-benefit evaluation.
- Confirm that the product can be safely renewed at the end of a x-year period (check national regulations) for an unlimited period, or any action recommended or initiated should be specified and justified.
- Confirm that the authorities have been kept informed of any additional data significant for the assessment of the benefit/risk ration of the product concerned.
- Confirm that the product information is up to date with the current scientific knowledge including the conclusions of the assessments and recommendations made publicly available.

VII. Appendix 1. Examples of tabulations for estimated exposure and adverse events/reactions data

Marketing authorisation holders can modify these examples tabulations to suit specific situations, as appropriate.

Table VII.2. Estimated cumulative subject exposure from clinical trials

Estimates of cumulative subject exposure, based upon actual exposure data from completed clinical trials and the enrolment/randomisation schemes for ongoing trials.

Treatment	**Number of Subjects**
Medicinal product	
Comparator	
Placebo	

Table VII.3. Cumulative subject exposure to investigational drug from completed clinical trials by age and sex

Number of subjects			
Age range	Male	Female	Total

Data from completed trials as of <*insert date*>

Table VII.4. Cumulative subject exposure to investigational drug from completed clinical trials by racial/ethnic group

Racial/ethnic group	**Number of subjects**
Asian	
Black	
Caucasian	
Other	
Unknown	
Total	

Data from completed trials as of <*insert date*>

Table VII.5. Cumulative exposure from marketing experience

Indication	**Sex**		**Age (years)**				**Dose**			**Formulation**		**Region**					
	Male	Female	2 to ≤16	>16 to 65	>65	Unknown	<40	≥40	Unknown	Intravenous	Oral	Arab country concerned	EU	Japan	Colombia	US/Canada	Other
Overall																	
e.g. Depression																	
e.g. Migraine																	

Table VII.5 includes cumulative data obtained from day/month/year throughout day/month/year, where available

Table VII.6. Interval exposure from marketing experience

Indication	**Sex**		**Age (years)**				**Dose**			**Formulation**		**Region**					
	Male	Female	2 to ≤16	>16 to 65	>65	Unknown	<40	≥40	Unknown	Intravenous	Oral	Arab country concerned	EU	Japan	Colombia	US/Canada	Other
e.g. Depression																	
e.g. Migraine																	

Table VII. 6 includes interval data obtained from day/month/year throughout day/month/year

Table VII.7. Cumulative tabulation of serious adverse events from clinical trials

System Organ Class Preferred Term	**Investigational medicinal product**	**Blinded**	**Active comparator**	**Placebo**
Blood and lymphatic system disorders				
Anaemia				
Bone marrow necrosis				
Cardiac disorders				
Tachycardia				
Ischaemic cardiomyopathy				
<SOC>				
<PT>				

Table VII.8. Numbers of adverse reactions by preferred term from post-authorisation sources*

MedDRA SOC PT	**Spontaneous, including medicines authorities (worldwide) and literature**					**Non-interventional post-marketing study and reports from other solicited sources ****	
	Serious		Non-serious		Total Spontaneous	Serious	
	Interval	Cumulative	Interval	Cumulative	Cumulative	Interval	Cumulative
<SOC 1>							
<PT>							
<PT>							
<PT>							
<SOC 2>							
<PT>							
<PT>							
<PT>							
<PT>							

* Non-interventional post-authorisation studies, reports from other solicited sources and spontaneous ICSRs (i.e., reports from healthcare professionals, consumers, medicines authorities (worldwide), and scientific literature)

** This does not include interventional clinical trials.

VII.Appendix 2. Example of tabular summary of safety signals that were ongoing or closed during the reporting interval

Table VII.9. The tabular summary below is a fictitious example of tabular summary of safety signals ongoing or closed during the reporting interval

Reporting interval: DD-MMM-YYYY to DD-MMM-YYYY

Signal term	Date detected	Status (ongoing or closed)	Date closed (for closed signals)	Source of signal	Reason for evaluation and summary of key data	Method of signal evaluation	Action(s) taken or planned
Stroke	MMM/YYYY	Ongoing	MMM/YYYY	meta-analysis (published trials)	Statistically significant increase in frequency	Review meta-analysis and available data	Pending
SJS	MMM/YYYY	Closed	MMM/YYYY	Spontaneous case reports	Rash already an identified risk SJS not reported in pre authorisation CTs. 4 reports within 6 months of authorisation; plausible time to onset and no possible alternative causes.	Targeted follow up of reports with site visit to one hospital. Full review of cases by MAH dermatologist and literature searches	RSI updated with a warning and precaution DHPC sent Effectiveness survey planned 6 months post DHPC. RMP updated

Explanatory notes:

Signal term:

- A brief descriptive name of a medical concept for the signal. This may evolve and be refined as the signal is evaluated. The concept and scope may or may not be limited to specific MedDRA term(s), depending on the source of signal.

Date detected:

- Month and year the marketing authorisation holder became aware of the signal.

Status:

- Ongoing: Signal under evaluation at the data lock point of the PSUR. Anticipated completion date, if known, should be provided.
- Closed: Signal for which evaluation was completed before the data lock point of the PSUR.

Note: A new signal of which the marketing authorisation holder became aware during the reporting interval may be classified as closed or ongoing, depending on the status of the signal evaluation at the end of the reporting interval of the PSUR.

Date closed:

- Month and year when the signal evaluation was completed.

Source of signal:

- Data or information source from which a signal arose. Examples include, but may not be limited to, spontaneous reports, clinical trial data, scientific literature, and non-clinical study results, or information request or inquiries from a medicines authority (worldwide).

Reason for evaluation and summary of key data:

- A brief summary of key data and rationale for further evaluation.

Action(s) taken or planned:

- State whether or not a specific action has been taken or is planned for all closed signals that have been classified as potential or identified risks. If any further actions are planned for newly or previously identified signals under evaluation at the data lock point, these should be listed, otherwise leave blank for ongoing signals.

Guideline on good pharmacovigilance practices (GVP)
For Arab Countries

GVP: Modules

Module VIII – Post authorization safety studies

VIII.A. Introduction

A post-authorisation safety study (PASS) is defined as any study relating to an authorised medicinal product conducted with the aim of identifying, characterising or quantifying a safety hazard, confirming the safety profile of the medicinal product, or of measuring the effectiveness of risk management measures.

A PASS may be initiated, managed or financed by a marketing authorisation holder voluntarily, or pursuant to an obligation imposed by a medicines authority.

This Module concerns PASS which are clinical trials or non-interventional studies and does not address non-clinical safety studies.

A PASS is non-interventional if the following requirements are cumulatively fulfilled:

- the medicinal product is prescribed in the usual manner in accordance with the terms of the marketing authorisation;
- the assignment of the patient to a particular therapeutic strategy is not decided in advance by a trial protocol but falls within current practice and the prescription of the medicine is clearly separated from the decision to include the patient in the study; and
- no additional diagnostic or monitoring procedures are applied to the patients and epidemiological methods are used for the analysis of collected data.

Non-interventional studies are defined by the methodological approach used and not by its scientific objectives. Non-interventional studies include database research or review of records where all the events of interest have already happened (this may include case-control, cross-sectional, cohort or other study designs making secondary use of data). Non-interventional studies also include those involving primary data collection (e.g. prospective observational studies and registries in which the data collected derive from routine clinical care), provided that the conditions set out above are met. In these studies, interviews, questionnaires and blood samples may be performed as part of normal clinical practice.

If a PASS is a clinical trial (i.e. interventional study); the national regulation for pharmacovigilance of clinical trials and the national rules governing interventional clinical trials of medicinal products in each Arab Country shall be followed.

The purposes of this Module are to:

- provide general guidance for the transparency, scientific standards and quality standards of non-interventional PASS conducted by marketing authorisation holders voluntarily or pursuant to an obligation imposed by a medicines authority (VIII.B.);
- describe procedures whereby medicines authorities may impose to a marketing authorisation holder an obligation to conduct a clinical trial or a non-interventional study (VIII.C.2.), and the impact of this obligation on the risk management system (VIII.C.3);
- describe procedures that apply to non-interventional PASS imposed as an obligation for the protocol oversight and reporting of results (VIII.C.4.) and for changes to the marketing authorisation following results (VIII.C.5.).

In this Module, all applicable legal requirements are usually identifiable by the modal verb “shall”. Guidance for the implementation of legal requirements is provided using the modal verb “should”.

Under this module; the role and responsibilities of the national medicines authority include- among others- the role of the national scientific research ethics committee which is in some Arab Countries not a part of the national medicines authority, in such cases collaboration between the national medicines authority and the national scientific research ethics committee should take place.

VIII.B. Structures and processes

VIII.B.1. Scope

The guidance in VIII.B. applies to **non-interventional PASS** which are initiated, managed or financed by a marketing authorisation holder and conducted in the Arab Country concerned. This guidance should also be used for studies conducted outside the Arab Country concerned which have been imposed or required by this medicines authority (studies defined in Module V).

Where applicable, legal requirements which are applicable to studies conducted pursuant to an obligation are recommended to studies conducted voluntarily in order to support the same level of transparency, scientific standards and quality standards for all PASS. This applies, for example, to the format of study protocols, abstracts and final study reports and to the communication of study information to national medicines authorities. Where relevant, a distinction is made in the text between situations where the provision of the guidance represents a legal requirement or a recommendation.

This guidance apply to studies initiated, managed or financed by a marketing authorisation holder as well as those conducted by a third party on behalf of the marketing authorisation holder.

This guidance applies to studies that involve primary collection of safety data directly from patients and health care professionals and those that make secondary use of data previously collected from patients and health care professionals for another purpose.

VIII.B.2. Terminology

Date at which a study commences: date of the start of data collection.

Start of data collection: the date from which information on the first study subject is first recorded in the study dataset or, in the case of secondary use of data, the date from which data extraction starts. Simple counts in a database to support the development of the study protocol, for example to inform the sample size and statistical precision of the study, are not part of this definition.

End of data collection: the date from which the analytical dataset is completely available.

Analytical dataset: the minimum set of data required to perform the statistical analyses leading to the results for the primary objective(s) of the study.

Substantial amendment to the study protocol: amendment to the protocol likely to have an impact on the safety, physical or mental well-being of the study participants or that may affect the study results

and their interpretation, such as changes to the primary or secondary objectives of the study, to the study population, to the sample size, to the definitions of the main exposure, outcome and confounding variables and to the analytical plan.

VIII.B.3. Principles

A post-authorisation study should be classified as a PASS when the main aim for initiating the study includes any of the following objectives:

- to quantify potential or identified risks, e.g. to characterise the incidence rate, estimate the rate ratio or rate difference in comparison to a non-exposed population or a population exposed to another drug or class of drugs, and investigate risk factors and effect modifiers;
- to evaluate risks of a medicinal product used in patient populations for which safety information is limited or missing (e.g. pregnant women, specific age groups, patients with renal or hepatic impairment);
- to evaluate the risks of a medicinal product after long-term use;
- to provide evidence about the absence of risks;
- to assess patterns of drug utilisation that add knowledge on the safety of the medicinal product (e.g. indication, dosage, co-medication, medication errors);
- to measure the effectiveness of a risk minimisation activity.

Whereas the PASS design should be appropriate to address the study objective(s), the classification of a post-authorisation study as a PASS is not constrained by the type of design chosen if it fulfils the criteria as set in definition of the PASS (see VIII.A). For example, a systematic literature review or a meta-analysis may be considered as PASS depending on their aim.

Relevant scientific guidance should be considered by marketing authorisation holders and investigators for the development of study protocols, the conduct of studies and the writing of study reports, and by national medicines authorities for the evaluation of study protocols and study reports. Relevant scientific guidance includes the ENCePP Guide on Methodological Standards in Pharmacoepidemiology[46], the ENCePP Checklist for Study Protocols [46], the Guideline on Conduct of Pharmacovigilance for Medicines Used by the Paediatric Population for studies conducted in children, and the Guidelines for Good Pharmacoepidemiology Practices of the International Society of Pharmacoepidemiology (ISPE GPP)[47].

For studies that are funded by a marketing authorisation holder, including studies developed, conducted or analysed fully or partially by investigators who are not employees of the marketing authorisation holder, the marketing authorisation holder should ensure that the investigators are qualified by education, training and experience to perform their tasks. The research contract between the marketing authorisation holder and investigators should ensure that the study meets its regulatory obligations while permitting their scientific expertise to be exercised throughout the research process. In the research contract, the marketing authorisation holder should consider the

[46] http://www.encepp.eu/standards_and_guidances/index.html
[47] http://www.pharmacoepi.org/resources/guidelines_08027.cfm

provisions of the ENCePP Code of Conduct [48], and address the following aspects:

- rationale, main objectives and brief description of the intended methods of the research to be carried out by the investigator(s);
- rights and obligations of the investigator(s) and marketing authorisation holder;
- clear assignment of tasks and responsibilities;
- procedure for achieving agreement on the study protocol;
- provisions for meeting the marketing authorisation holder's pharmacovigilance obligations, including the reporting of adverse reactions and other safety data by investigators, where applicable;
- intellectual property rights arising from the study and access to study data;
- storage and availability of analytical dataset and statistical programmes for audit and inspection;
- communication strategy for the scheduled progress and final reports;
- publication strategy of interim and final results.

Non-interventional post-authorisation safety studies shall not be performed where the act of conducting the study promotes the use of a medicinal product. This requirement applies to all studies and to all activities performed in the study, including for studies conducted by the personnel of the marketing authorisation holder and by third parties on behalf of the marketing authorisation holder.

Payments to healthcare professionals for participating shall be restricted to compensation for time and expenses incurred.

VIII.B.4. Study registration

In order to support transparency on non-interventional PASS conducted voluntarily or pursuant an obligation and to facilitate exchange of pharmacovigilance information between the national medicines authorities and marketing authorisation holders, the marketing authorisation holder should make study information (including for studies conducted outside the Arab Country concerned) available in the national register of post-authorisation studies [National PAS Register: it should be **electronic** register (if applicable) This register is maintained by the national medicines authority and accessible through its official website. Different register regulation may apply in different Arab Countries; consult the national medicines authorities for national requirement. The study protocol should be entered in the register before the start of data collection. Updates of the study protocol in case of substantial amendments, progress reports where applicable, and the final study report should be entered in the register (preferably within two weeks after their finalisation). Study information should normally be submitted in English. If the study protocol or the study report is written in another language, the marketing authorisation should facilitate access to study information by including an English translation of the title, the abstract of the study protocol and the abstract of the final study report (consult with the national medicines authority in the Arab country

[48] http://www.encepp.eu/code_of_conduct/index.html

concerned if other language is requested).

Where prior publication of the protocol could threaten the validity of the study (for example, in a case-control study where prior knowledge of the exposure of interest could lead to information bias) or the protection of intellectual rights, a study protocol with redactions made by the MAH may be entered into the register prior to the start of data collection. These redactions should be justified and kept to the minimum necessary for the objective aimed by the redaction process. Whenever a redacted study protocol is published prior to the start of data collection, the title page of the protocol should include the mention "Redacted protocol" and the complete study protocol should be made available to the national medicines authorities upon request. The complete study protocol should be entered in the register (preferably within two weeks after the end of data collection).

VIII.B.5. Study protocol

All post-authorisation safety studies must have a written study protocol before the study commences. The study should follow a scientifically sound protocol developed by individuals with appropriate scientific background and experience. Where present; national requirements shall be followed for ensuring the well-being and rights of the participants. The marketing authorisation holder is required to submit the protocol to the medicines authority of the Arab Country in which the study is conducted.

For PASS initiated by the marketing authorisation holder pursuant to an obligation, see VIII.C.4 for the submission of the study protocol.

In order to ensure compliance of the marketing authorisation holder with its pharmacovigilance obligations, the qualified person responsible for pharmacovigilance (QPPV) or his/her delegate/ National Local Safety Responsible (LSR) (see Module I) should be involved in the review and sign-off of study protocols conducted in the Arab Countries. Where applicable, the marketing authorisation holder's pharmacovigilance contact person at national level should be informed of any study sponsored or conducted by the marketing authorisation holder in that Arab Country and have access to the protocol.

VIII.B.5.1. Format and content of the study protocol

The study protocol should include the following information:

1. **Title**: informative title including a commonly used term indicating the study design and the medicinal product, substance or drug class concerned, and a sub-title with a version identifier and the date of the last version. If the study protocol has been registered in the national PAS Register, subsequent versions of the protocol should mention on the title page "<country name> PAS Register No:" with the registration number.
2. **Marketing authorisation holder**: name and address of the marketing authorisation holder.
3. **Responsible parties**: names, titles, qualifications, addresses, and affiliations of all main responsible parties, including the main author(s) of the protocol, the principal investigator, a coordinating investigator for each country in which the study is to be performed and other relevant study sites. A list of all collaborating institutions and investigators should be made

available to national medicines authorities upon request.

4. **Abstract**: stand-alone summary of the study protocol including the following sub-sections:
    - Title with subtitles including version and date of the protocol and name and affiliation of main author
    - Rationale and background
    - Research question and objectives
    - Study design
    - Population
    - Variables
    - Data sources
    - Study size
    - Data analysis
    - Milestones
5. **Amendments and updates**: any substantial amendment and update to the study protocol after the start of data collection, including a justification for each amendment or update, dates of each change and a reference to the section of the protocol where the change has been made.
6. **Milestones**: table with planned dates for the following milestones:
    - Start of data collection
    - End of data collection
    - Study progress report(s) as
    - Interim report(s) of study results, where applicable, in line with phases of data analyses
    - Final report of study results

    Any other important timelines in the conduct of the study should be presented.
7. **Rationale and background**: short description of the safety hazard(s), the safety profile or the risk management measures that led to the initiation or imposition of the study, and short critical review of available published and unpublished data to explain gaps in knowledge that the study is intended to fill. The review may encompass relevant animal and human experiments, clinical studies, vital statistics and previous epidemiologic studies. The review should cite the findings of similar studies, and the expected contribution of the current study.
8. **Research question and objectives**: research question that explains how the study will address the issue which led to the study being initiated or imposed, and research objectives, including any pre-specified hypotheses and main summary measures.
9. **Research methods**: description of the research methods, including:
    9.1. **Study design**: overall research design and rationale for this choice.

9.2. **Setting**: study population defined in terms of persons, place, time period, and selection criteria, including the rationale for any inclusion and exclusion criteria and their impact on the number of subjects available for analysis. Where any sampling from a source population is undertaken, description of the source population and details of sampling methods should be provided. Where the study design is a systematic review or a meta-analysis, the criteria for the selection and eligibility of studies should be explained.

9.3. **Variables**: outcomes, exposures and other variables including measured risk factors should be addressed separately, including operational definitions; potential confounding variables and effect modifiers should be specified.

9.4. **Data sources**: strategies and data sources for determining exposures, outcomes and all other variables relevant to the study objectives, such as potential confounding variables and effect modifiers. Where the study will use an existing data source, such as electronic health records, any information on the validity of the recording and coding of the data should be reported. If data collection methods or instruments are tested in a pilot study, plans for the pilot study should be presented. If a pilot study has already been performed, a summary of the results should be reported. Involvement of any expert committees to validate diagnoses should be stated. In case of a systematic review or meta-analysis, the search strategy and processes and any methods for confirming data from investigators should be described.

9.5. **Study size**: any projected study size, precision sought for study estimates and any calculation of the sample size that can minimally detect a pre-specified risk with a pre-specified statistical precision.

9.6. **Data management**: data management and statistical programmes to be used in the study, including procedures for data collection, retrieval and preparation.

9.7. **Data analysis**: the major steps that lead from raw data to a final result, including methods used to correct inconsistencies or errors, impute values, modify raw data, categorise, analyse and present results, and procedures to control sources of bias and their influence on results; statistical procedures to be applied to the data to obtain point estimates and confidence intervals of measures of occurrence or association, and sensitivity analyses.

9.8. **Quality control**: description of any mechanisms and procedures to ensure data quality and integrity, including accuracy and legibility of collected data and original documents, extent of source data verification and validation of endpoints, storage of records and archiving of statistical programmes. As appropriate, certification and/or qualifications of any supporting laboratory or research groups should be included.

9.9. **Limitations of the research methods**: any potential limitations of the study design, data sources, and analytic methods, including issues relating to confounding, bias, generalisability, and random error. The likely success of efforts taken to reduce errors should be discussed.

10. **Protection of human subjects**: safeguards in order to comply with national requirements for ensuring the well-being and rights of participants in non-interventional post-authorisation safety studies.

11. **Management and reporting of adverse events/adverse reactions**: procedures for the collection, management and reporting of individual cases of adverse reactions and of any new information that might influence the evaluation of the benefit-risk balance of the product while the study is being conducted. For studies where reporting is not required (see Module VI), this should be stated.
12. **Plans for disseminating and communicating study results,** including any plans for submission of progress reports and final reports.
13. **References.**

The format of the study protocol should follow the Guidance for the format and content of the protocol of non-interventional post-authorisation safety studies (see GVP Annex II).

Feasibility studies that were carried out to support the development of the protocol, for example, the testing of a questionnaire or simple counts of medical events or prescriptions in a database to determine the statistical precision of the study, should be reported in the appropriate section of the study protocol with a summary of their methods and results. The full report should be made available to the national medicines authorities upon request. Feasibility studies that are part of the research process should be described in the protocol, for example, a pilot evaluation of the study questionnaire(s) used for the first set of patients recruited into the study.

An annex should list all separate documents and list or include any additional or complementary information on specific aspects not previously addressed (e.g. questionnaires, case report forms), with clear document references.

VIII.B.5.2. Substantial amendments to the study protocol

The study protocol should be amended and updated as needed throughout the course of the study. Any substantial amendments to the protocol after the study start should be documented in the protocol in a traceable and auditable way including the dates of the changes. If changes to the protocol lead to the study being considered an interventional clinical trial, the national medicines authorities should be informed immediately and the study shall subsequently be conducted in accordance with The National Rules Governing Clinical Trials of Medicinal Products in the Arab Country concerned.

For PASS initiated by the marketing authorisation holder pursuant to an obligation, see VIII.C.4 for the submission of substantial amendments to the study protocol.

VIII.B.6. Reporting of pharmacovigilance data to medicines authorities

VIII.B.6.1. Data relevant to the risk-benefit balance of the product

The marketing authorisation holder shall monitor the data generated while the study is being conducted and consider their implications for the risk-benefit balance of the medicinal product concerned. Any new information that may affect the risk-benefit balance of the medicinal product should be communicated immediately in writing as an Emerging Safety Issue to medicines authorities of the Arab Countries in which the product is authorised. Information affecting the

risk-benefit balance of the medicinal product may include that arising from an analysis of adverse reactions and aggregated data.

This communication should not affect information on the results of studies which should be provided by means of periodic safety update reports (PSURs) (see Module VII) and in RMP updates (see Module V), where applicable.

VIII.B.6.2. Reporting of adverse reactions/adverse events

Adverse reactions/adverse events should be reported to medicines authorities in accordance with the provisions of Module VI. Procedures for the collection, management (including a review by the marketing authorisation holder if appropriate) and reporting of suspected adverse reactions/adverse events should be put in place and summarised in the study protocol. If appropriate, reference can be made to the Pharmacovigilance System Master File (see Module II) but details specific to the study should be described in this section. For study designs where expedited reporting is not required, this should be stated in the study protocol.

VIII.B.6.3. Study reports

VIII.B.6.3.1 Progress reports

Progress reports may be requested by a national medicines authority. Requests for progress reports may be made before the study commences or any time during the study conduct. They may be guided by the communication of risk-benefit information arising from the study or the need for information about the study progress in the context of regulatory procedures or important safety communication about the product.

The timing of the progress reports should be agreed with the relevant medicines authorities and specified in the study protocol when they have been agreed before the study commences. Study progress should also be reported in any periodic safety update reports (PSURs) (see Module VII) and risk management plan (RMP) updates (see Module V), where applicable.

The content of the progress report should follow a logical sequence and should include all the available data that are judged relevant for the progress of the study, for example, number of patients who have entered the study, number of exposed patients or number of patients presenting the outcome, problems encountered and deviations from the expected plan. The progress report may also include any interim report of study results. After review of the report, additional information may be requested.

VIII.B.6.3.2. Final study report

The final study report should be submitted as soon as possible within 12 months of the end of data collection.

For PASS initiated by the marketing authorisation holder pursuant to an obligation, see VIII.C.4 as regards submission of the final study report.

If a study is discontinued, a final report should be submitted and the reasons for terminating the study should be provided.

The final study report should include the following information:

1. **Title**: title including a commonly used term indicating the study design; sub-titles with date of final report and name and affiliation of main author. If the study has been registered in the national PAS Register, the final study report should mention on the title page "<country name> PAS Register No:" with the registration number.
2. **Abstract**: stand-alone summary in the format presented below.
3. **Marketing authorisation holder**: name and address of the marketing authorisation holder.
4. **Investigators**: names, titles, degrees, addresses and affiliations of all main responsible parties, including the main author(s) of the protocol, the principal investigator, a coordinating investigator for each country in which the study is to be performed and other relevant study sites. A list of all collaborating institutions and investigators should be made available to national medicines authorities upon request.
5. **Milestones**: planned and actual dates for the following milestones:
    - Start of data collection
    - End of data collection or date of early termination, if applicable, with reasons for termination
    - Study progress report(s)
    - Interim report(s) of study results, where applicable
    - Final report of study results
    - Any other important milestone applicable to the study, including date of protocol approval by an Institutional Review Board/Independent Ethics Committee if applicable, and date of study registration in the National PAS Register.
6. **Rationale and background**: short description of the safety concern(s) that led to the study being initiated or imposed, and short critical review of relevant published and unpublished data evaluating pertinent information and gaps in knowledge that the study is intended to fill.
7. **Research question and objectives**: research question and research objectives, including any pre-specified hypotheses, as stated in the study protocol.
8. **Amendments and updates to the protocol**: list of any substantial amendment and update to the initial study protocol after the start of data collection, including a justification for each amendment or update.
9. **Research methods**:
    9.1. **Study design**: key elements of the study design and the rationale for this choice.
    9.2. **Setting**: setting, locations, and relevant dates for the study, including periods of recruitment, follow-up, and data collection. In case of a systematic review or meta-analysis, study characteristics used as criteria for eligibility, with rationale.
    9.3. **Subjects**: any source population and eligibility criteria of study subjects. Sources and methods of selection of participants should be provided, including, where relevant

methods for case ascertainment, as well as number of and reasons for dropouts.

9.4. **Variables**: all outcomes, exposures, predictors, potential confounders, and effect modifiers, including operational definitions and diagnostic criteria, if applicable.

9.5. **Data sources and measurement**: for each variable of interest, sources of data and details of methods of assessment and measurement. If the study has used an existing data source, such as electronic health records, any information on the validity of the recording and coding of the data should be reported. In case of a systematic review or meta-analysis, description of all information sources, search strategy, methods for selecting studies, methods of data extraction and any processes for obtaining or confirming data from investigators.

9.6. **Bias**: any efforts to assess and address potential sources of bias.

9.7. **Study size**: study size, rationale for any sample size calculation and any method for attaining projected study size.

9.8. **Data transformation**: transformations, calculations or operations on the data, including how quantitative data were handled in the analyses and which groupings were chosen and why.

9.9. **Statistical methods**: description of:

- main summary measures
- statistical methods applied to the study, including those used to control for confounding and, for meta-analyses, methods for combining results of studies
- any methods used to examine subgroups and interactions
- how missing data were addressed
- any sensitivity analyses
- any amendment to the plan of data analysis included in the study protocol, with a rationale for the change.

9.10. **Quality control**: mechanisms to ensure data quality and integrity.

10. **Results**: presentation of tables, graphs, and illustrations to present the pertinent data and reflect the analyses performed. Both unadjusted and adjusted results should be presented. Precision of estimates should be quantified using confidence intervals. This section should include the following sub-sections:

10.1. **Participants**: numbers of study subjects at each stage of study, e.g. numbers potentially eligible, examined for eligibility, confirmed eligible, included in the study, completing follow-up, and analysed, and reasons for non-participation at any stage. In the case of a systematic review or meta-analysis, number of studies screened, assessed for eligibility and included in the review with reasons for exclusion at each stage.

10.2. **Descriptive data**: characteristics of study participants, information on exposures and potential confounders and number of participants with missing data for each variable of interest. In case of a systematic review or meta-analysis, characteristics of each study

from which data were extracted (e.g. study size, follow-up).

10.3. **Outcome data**: numbers of participants across categories of main outcomes.

10.4. **Main results**: unadjusted estimates and, if applicable, confounder-adjusted estimates and their precision (e.g. 95% confidence interval). If relevant, estimates of relative risk should be translated into absolute risk for a meaningful time period.

10.5. **Other analyses**: other analyses done, e.g. analyses of subgroups and interactions, and sensitivity analyses.

10.6. **Adverse events and adverse reactions**: summary of all adverse events/adverse reactions reported in the study, in line with requirements described in Module VI. For certain study designs such as case-control or retrospective cohort studies, particularly those involving electronic health care records, systematic reviews and meta-analyses where it is not feasible to make a causality assessment at the individual case level, this should be stated.

11. **Discussion**:

11.1. **Key results**: key results with reference to the study objectives, prior research in support of and conflicting with the findings of the completed post-authorisation safety study, and, where relevant, impact of the results on the risk-benefit balance of the product.

11.2. **Limitations**: limitations of the study taking into account circumstances that may have affected the quality or integrity of the data, limitations of the study approach and methods used to address them (e.g., response rates, missing or incomplete data, imputations applied), sources of potential bias and imprecision and validation of the events. Both direction and magnitude of potential biases should be discussed.

11.3. **Interpretation**: interpretation of results considering objectives, limitations, multiplicity of analyses, results from similar studies and other relevant evidence.

11.4. **Generalisability**: the generalisability (external validity) of the study results.

12. **References**.

13. **Other information**: any additional or complementary information on specific aspects not previously addressed.

The format of the final study report should follow the Guidance for the format and content of the final study report of non-interventional post-authorisation safety studies (see Annex II of this GVP)

The abstract of the final study report should include a summary of the study methods and findings presented in the following format:

1. Title, with subtitles including date of the abstract and name and affiliation of main author;
2. Keywords (not more than five keywords indicating the main study characteristics);
3. Rationale and background;
4. Research question and objectives;
5. Study design;
6. Setting;

7. Subjects and study size, including dropouts;
8. Variables and data sources;
9. Results;
10. Discussion (including, where relevant, an evaluation of the impact of study results on the risk-benefit balance of the product);
11. Marketing authorisation holder;
12. Names and affiliations of principal investigators.

VIII.B.7. Publication of study results

For studies that are fully or partially conducted by investigators who are not employees of the marketing authorisation holder, the marketing authorisation holder and the investigator should agree in advance a publication policy allowing the principal investigator to independently prepare publications based on the study results irrespective of data ownership. The marketing authorisation holder should be entitled to view the results and interpretations included in the manuscript and provide comments prior to submission of the manuscript for publication.

VIII.B.7.1. Regulatory submission of manuscripts accepted for publication

In order to allow national medicines authorities to review in advance the results and interpretations to be published, the marketing authorisation holder should communicate to the medicines authorities of the Arab Countries in which the product is authorised the final manuscript of the article within two weeks after first acceptance for publication.

VIII.B.8. Data protection

Marketing authorisation holders and investigators shall follow relevant national legislation and guidance of those Arab Countries where the study is being conducted. The legislation on data protection must be followed.

For PASS imposed as an obligation, the marketing authorisation holder shall ensure that all study information is handled and stored so as to allow for accurate reporting, interpretation and verification of that information and shall ensure that the confidentiality of the records of the study subjects remains protected. This provision should also be applied to PASS voluntarily initiated, managed or financed by the marketing authorisation holder.

VIII.B.9. Quality systems, audits and inspections

The marketing authorisation holder shall ensure the fulfilment of its pharmacovigilance obligations in relation to the study and that this can be audited, inspected and verified. For PASS imposed as an obligation, the marketing authorisation holder shall ensure that the analytical dataset and statistical programmes used for generating the data included in the final study report are kept in electronic

format and are available for auditing and inspection. This provision should also be applied to PASS voluntarily initiated, managed or financed by the marketing authorisation holder.

VIII.B.10. Impact on the risk management system

Non-interventional PASS imposed as an obligation or required to investigate a safety concern of the RMP should be described in the RMP Part III (see Module V). Protocols for studies in the pharmacovigilance plan should be provided in RMP annex 6 until submission of the final study report to the medicines authorities. Studies looking at the effectiveness of risk minimisation measures should be included in the pharmacovigilance plan against the specific safety concern(s) as well as described in detail in the risk minimisation plan.

Other non-interventional PASS which are not obligations or required studies in the RMP but which could provide relevant information on the safety profile of the product should be listed in the RMP section III "Summary table of additional pharmacovigilance activities.

For studies described in the RMP, see also VIII.C.3.

VIII.C. Operation in the Arab Countries

VIII.C.1. Scope

Provisions of VIII.C. refer specifically to post-authorisation safety studies initiated, managed or financed by marketing authorisation holders pursuant to obligations imposed by a medicines authority. Sections VIII.C.2. and VIII.C.3. apply to both interventional and non-interventional PASS. Sections VIII.C.4. and VIII.C.5. apply to non-interventional PASS.

VIII.C.2. Procedure for imposing post-authorisation safety studies

The conduct of any post-authorisation safety study (PASS) can be imposed during the evaluation of the initial marketing authorisation application or during the post-authorisation phase by the national medicines authority whenever there are concerns about the risks of an authorised medicinal product. This obligation shall be duly justified based on benefit-risk considerations, shall be notified in writing and shall include the objectives and timeframe for the submission and conduct of the study. The request may also include recommendations on key elements of the study (e.g. study design, setting, exposure(s), outcome(s), study population). An overview of study designs and databases frequently used in post-authorisation safety studies is provided in VIII.Appendix 1.

a. Request for a post-authorisation safety study as part of the initial marketing authorisation application

A marketing authorisation may be granted by the national medicines authority subject to the conduct of a PASS.

b. Request for a post-authorisation safety study during a post-authorisation regulatory procedure

The need for a PASS could be identified by a national medicines authority during a

post-authorisation regulatory procedure, for example, an extension or a variation to a marketing authorisation or a renewal procedure.

c. Request for a post-authorisation safety study due to an emerging safety concern

After the granting of the marketing authorisation, a national medicines authority, where applicable, may impose on the marketing authorisation holder an obligation to conduct a post-authorisation safety study if there are concerns about the risk of the authorised medicinal product, for example following evaluation of a safety signal (see Module IX).

d. Joint post-authorisation safety studies

If safety concerns apply to more than one medicinal product, the national medicines authority may if applicable encourage the marketing authorisation holders concerned to conduct a joint PASS. A joint PASS may also be necessary where there are limited patients (rare diseases) or the adverse reaction is rare. Requests to the marketing authorisation holders should contain the justification for the request of a joint study and the elements of the study design that support a joint protocol. Upon request from the marketing authorisation holders, the national medicines authority may organise a pre-submission meeting in order to provide suggestions for a joint study proposal and facilitate agreement in developing a joint protocol. If a joint protocol is not voluntarily agreed and different proposals are submitted, the national medicines authority may define, in consultation with the relevant committee, either a common core protocol or key elements (for example, the study design, the study population and the definition of exposure and outcomes) which each marketing authorisation holder will have to implement in the study protocol to be submitted to the national medicines authority.

e. Written observations in response to the imposition of an obligation

Within 30 days of receipt of the written notification of the obligation, the marketing authorisation holder may request the opportunity to present written observations in response to the imposition of the obligation. The national medicines authority shall specify a time limit for the provision of these observations. On the basis of the written observations submitted by the marketing authorisation holder, the national medicines authority shall withdraw or confirm the obligation. When the obligation is confirmed, the marketing authorisation shall be subject to variation to include the obligation as a condition and the risk management plan (RMP), where applicable, shall be updated accordingly (see Module V).

VIII.C.3. Impact on the risk management system

All post-authorisation safety studies imposed as a condition to the marketing authorisation will be described in the RMP (see Module V and VIII.B.10.) and their results provided in the PSUR following completion of the final report, where applicable (see Module VII).

All relevant sections/modules of the RMP should be amended to document the conduct of the study, including the safety specification, the pharmacovigilance plan, the risk minimisation plan and the summary of activities, as appropriate. A copy of the study protocol approved by the national

medicines authority should be provided in annex 6 of the RMP.

When a RMP does not exist, a new RMP should be developed referring to the post-authorisation safety study.

VIII.C.4. Regulatory supervision of non-interventional post-authorisation safety studies

Non-interventional PASS conducted pursuant to obligations imposed by the national medicines authority are supervised and assessed by the national pharmacovigilance center/ directorate or national pharmacovigilance advisory committee as appropriate. . Necessary approvals from the national scientific research ethics committee should be obtained as well.

VIII.C.4.1. Roles and responsibilities of the marketing authorisation holder

Following the imposing of the obligation to conduct a non-interventional PASS as a condition to the marketing authorisation, the marketing authorisation holder shall develop a study protocol and submit it to the national medicines authority.

The marketing authorisation holder has the responsibility to ensure that the study is not a clinical trial, in which case national regulations for clinical trials shall apply. If the study is a non-interventional study (see VIII.A.), the marketing authorisation holder shall ensure that the study meets the requirements applicable to non-interventional PASS in Module VIII.B and in requirements specific to the requested PASS. The marketing authorisation holder shall ensure the fulfilment of its pharmacovigilance obligations in relation to the study and that this can be audited, inspected and verified (see VIII.B.8. and VIII.B.9.).

The marketing authorisation holder shall develop the study protocol following the format described in the “Guidance for the format and content of the protocol of non-interventional post-authorisation safety studies” (See Annex II of GVP) and should consider the recommendations set out in VIII.B.5.1. The study may commence only when the written endorsement from the national medicines authority/ national scientific research ethics committee, as appropriate, has been issued. When a letter of endorsement has been issued by the national scientific research ethics committee in the Arab Country in which the study is to be conducted, the marketing authorisation holder shall notify the national pharmacovigilance centre/directorate of this national medicines authority and may thereafter commence the study according to the endorsed protocol. National requirements shall be followed to ensure the well-being and rights of participants in the study.

Prior to submission of the protocol, the marketing authorisation holder may submit a request for a pre-submission meeting with the national medicines authority in order to clarify specific aspects of the requested study (such as study objectives, study population, definition of exposure and outcomes) and to facilitate the development of the protocol in accordance with the objectives determined by national medicines authority.

After a study has been commenced, the marketing authorisation holder shall submit any substantial amendments to the protocol, before their implementation, to the national medicines authority/national scientific research ethics committee, as appropriate (see VIII.B.2. for the

definition of a substantial amendment).

The marketing authorisation holder may be requested to submit the study progress reports to the national medicines authorities in which the study is conducted.

Upon completion of the study, the marketing authorisation holder shall submit a final study report, including a public abstract, to the national medicines authority/ national scientific research ethics committee as soon as possible and not later than 12 months after the end of data collection, unless a written waiver has been granted by the national authority , the marketing authorisation holder should request the waiver in writing at least three months before the due date for the submission of the report, the waiver request may be granted or rejected on the basis of the justification and timeline submitted by the marketing authorisation holder. The final study report shall follow the format described in "Guidance for the format and content of the final study report of non-interventional post-authorisation safety studies" (see Annex II of GVP), with consideration to the recommendations set out in VIII.B.6.3.2.

The marketing authorisation holder shall submit the study protocol, the abstract of the final study report and the final study report in English. If the study protocol or the study report is written in another language, the marketing authorisation holder shall provide an English translation of the title and abstract of the study protocol as well as an English translation of the abstract of the final study report, (consult with the national medicines authority in the Arab country concerned if other language is requested).

VIII.C.4.2. Roles and responsibilities of the national medicines authority

The national medicines authority should write a protocol assessment report, including a list of questions if appropriate, review and approve the submitted protocol as appropriate.

If the study proves to be interventional, the national medicines authority should not provide an assessment report but should issue an explanatory statement to the marketing authorisation holder that the study is a clinical trial falling under the scope of national regulation for clinical trials of medicinal products.

Within 60 days from submission of the draft protocol, the national medicines authority shall issue a letter endorsing the draft protocol, a letter of objection or a letter notifying the marketing authorisation holder that the study is a clinical trial falling under the scope of national regulation for clinical trials of medicinal products. The letter of objection shall set out in detail the grounds for the objection in any of the following cases:

- it is considered that the conduct of the study promotes the use of a medicinal product;
- it is considered that the design of the study does not fulfil the study objectives .

In case of submission of an amended study protocol, the national medicines authority shall assess the amendments and inform the marketing authorisation holder of its endorsement or objection. The national medicines authority will provide the marketing authorisation holder with a letter of endorsement or objection to the protocol amendment within 30 days of submission. The letter of objection will provide a timeline by which the marketing authorisation holder should resubmit an amended version of the protocol.

When the national medicines authority has assessed the final study results, it will produce an assessment report, including a list of questions as appropriate. If the national medicines authority addresses a list of questions to the marketing authorisation holder, the conclusion on the study results including decision will be issued once the marketing authorisation holder has addressed the questions posed within the timeline specified.

The national medicines authority will inform the marketing authorisation holder in writing and within the appropriate timelines of its decisions with respect to the assessment of the following:

- Study protocol;
- Study protocol amendments;
- Final study report;
- Waiver request for the submission of the final study protocol.

When the marketing authorisation holder submit a request to the national medicines authority for a pre-submission meeting the later will set up of this meeting as appropriate.

VIII.C.5. Changes to the marketing authorisation following results from a non-interventional post-authorisation safety study

The marketing authorisation holder shall evaluate whether the study results have an impact on the marketing authorisation and shall, if necessary, submit to the national medicines authorities an application to vary the marketing authorisation. In such case, the variation should be submitted to the national medicines authority with the final study report within 12 months of the end of data collection.

Following the review of the final study report, the national medicines authority may decide variation, suspension or revocation of the marketing authorisation. The decision shall mention any divergent positions and the grounds on which they are based and include a timetable for the implementation of this agreed action. The agreed decision shall be sent to the marketing authorisation holder and to the relevant departments within the national medicines authority which should adopt necessary measures to vary, suspend or revoke the marketing authorisation in line with the implementation timetable stated in the decision. In case a variation is agreed upon, the marketing authorisation holder shall submit to the national medicines authorities an appropriate application for a variation, including an updated summary of product characteristics (SmPC) and package leaflet within the determined timetable for implementation.

More urgent action may be required in certain circumstances, for example, based on interim results included in progress reports (see also VIII.B.6.3.1).

VIII.Appendix 1. Methods for post-authorisation safety studies

VIII.App1.1. Study designs

Post-authorisation safety studies may adopt different designs depending on their objectives. A brief description of the main types of studies, as well as the types of data resources available, is provided hereafter. However, this Appendix is not intended to be exhaustive and should be complemented with other information sources, such as the ENCePP Guide for Methodological Standards.

VIII.App1.1.1. Active surveillance

Active surveillance, in contrast to passive surveillance, seeks to ascertain more completely the number of adverse events in a given population via a continuous organised process. An example of active surveillance is the follow-up of patients treated with a particular medicinal product through a risk management system. Patients who fill a prescription for this product may be asked to complete a brief survey form and give permission for later contact. In general, it is more feasible to get comprehensive data on individual adverse event reports through an active surveillance system than through a passive reporting system. Automatic detection of abnormal laboratory values from computerised laboratory reports in certain clinical settings may also provide an efficient active surveillance system.

VIII.App1.1.1.1. Intensive monitoring schemes

Intensive monitoring is a system of record collation in designated areas, e.g. hospital units or by specific healthcare professionals in community practice. In such cases, the data collection may be undertaken by monitors who attend ward rounds, where they gather information concerning undesirable or unintended events thought by the attending physician to be causally related to the medication. Monitoring may also be focused on certain major events that tend to be drug-related such as jaundice, renal failure, haematological disorders, bleeding. The major strength of such systems is that the monitors may document important information about the events and exposure to medicinal products. The major limitation is the need to maintain a trained monitoring team over time.

Intensive monitoring may be achieved by reviewing medical records or interviewing patients and/or physicians/pharmacists in a sample of sentinel sites to ensure complete and accurate data on reported adverse events. The selected sites may provide information, such as data from specific patient subgroups that would not be available in a passive spontaneous reporting system. Further, collection of information on the use of a medicinal product, such as the potential for abuse, may be targeted at selected sentinel sites. Some of the major weaknesses of sentinel sites are problems with selection bias, small numbers of patients, and increased costs. Intensive monitoring with sentinel sites is most efficient for those medicinal products used mainly in institutional settings such as hospitals, nursing homes, and haemodialysis centres. Institutional settings may have a greater frequency of use for certain products and may provide an infrastructure for dedicated reporting. In addition, automatic detection of abnormal laboratory values from computerised laboratory reports

in certain clinical settings may provide an efficient active surveillance system.

VIII.App1.1.1.2. Prescription event monitoring

In prescription event monitoring, patients may be identified from electronic prescription data or automated health insurance claims. A follow-up questionnaire can then be sent to each prescribing physician or patient at pre-specified intervals to obtain outcome information. Information on patient demographics, indication for treatment, duration of therapy (including start dates), dosage, clinical events, and reasons for discontinuation can be included in the questionnaire. Limitations of prescription event monitoring include incomplete physician response and limited scope to study products which are used exclusively in hospitals. More detailed information on adverse events from a large number of physicians and/or patients may be collected.

VIII.App1.1.1.3. Registries

A registry is an organised system that uses observational methods to collect uniform data on specified outcomes in a population defined by a particular disease, condition or exposure. A registry can be used as a data source within which studies can be performed. Entry in a registry is generally defined either by diagnosis of a disease (disease registry) or prescription of a drug (exposure registry).

Disease/outcome registries, such as registries for blood dyscrasias, severe cutaneous reactions, or congenital malformations may help collect data on drug exposure and other factors associated with a clinical condition. A disease registry might also be used as a base for a case-control study comparing the drug exposure of cases identified from the registry and controls selected from either patients within the registry with another condition or from outside the registry, or for a case-only design (see VIII.App 1.1.2.4.).

Exposure registries address populations exposed to medicinal products of interest (e.g. registry of rheumatoid arthritis patients exposed to biological therapies) to determine if a medicinal product has a special impact on this group of patients. Some exposure registries address exposures to medicinal products in specific populations, such as pregnant women. Patients may be followed over time and included in a cohort study to collect data on adverse events using standardised questionnaires. Simple cohort studies may measure incidence, but, without a comparison group, cannot evaluate any association between exposures and outcomes. Nonetheless, they may be useful for signal amplification particularly for rare outcomes. This type of registry may be very valuable when examining the safety of an orphan drug indicated for a specific condition.

VIII.App1.1.2. Observational studies

Traditional epidemiological methods are a key component in the evaluation of adverse events. There are a number of observational study designs that are useful in validating signals from spontaneous reports, active surveillance programmes or case series. Major types of these designs are cross-sectional studies, case-control studies, and cohort studies, based on primary data collection or secondary use of existing data.

VIII.App1.1.2.1. Cross-sectional study (survey)

Data collected on a population of patients at a single point in time (or interval of time) regardless of exposure or disease status constitute a cross-sectional study. These types of studies are primarily used to gather data for surveys or for ecological analyses. A drawback of cross-sectional studies is that the temporal relationship between exposure and outcome cannot be directly addressed, which limits its use for etiologic research unless the exposures do not change over time. These studies are best used to examine the prevalence of a disease at one time-point or to examine trends over time, when data for serial time-points can be captured. These studies may also be used to examine the crude association between exposure and outcome in ecologic analyses.

VIII.App1.1.2.2. Cohort Study

In a cohort study, a population-at-risk for an event of interest is followed over time for the occurrence of that event. Information on exposure status is known throughout the follow-up period for each patient. A patient might be exposed to a medicinal product at one time during follow-up, but non-exposed at another time point. Since the population exposure during follow-up is known, incidence rates can be calculated. In many cohort studies involving exposure to medicinal product(s), comparison cohorts of interest are selected on the basis of medication use and followed over time. Cohort studies are useful when there is a need to know the incidence rates of adverse events in addition to the relative risks of adverse events. Multiple adverse events may also be investigated using the same data source in a cohort study. However, it may be difficult to recruit sufficient numbers of patients who are exposed to a product of interest (such as an orphan drug) or to study very rare outcomes. The identification of patients for cohort studies may come from large automated databases or from data collected specifically for the study at hand. In addition, cohort studies may be used to examine safety concerns in special populations (the elderly, children, patients with co-morbid conditions, pregnant women) through over-sampling of these patients or by stratifying the cohort if sufficient numbers of patients exist.

VIII.App1.1.2.3. Case-control study

In a case-control study, cases of disease (or events) are identified and patients without the disease or event of interest at the time of selection, are then selected as controls from the source population that gave rise to the cases. The exposure status of the two groups is then compared using the odds ratio, which is an estimate of the relative risk of disease among the exposed as compared to the non-exposed. Patients may be identified from an existing database or using data collected specifically for the purpose of the study of interest. If safety information is sought for special populations, the cases and controls may be stratified according to the population of interest (the elderly, children, pregnant women, etc.). Existing large population-based databases are a useful and efficient means of providing needed exposure and medical outcome data in a relatively short period of time. Case-control studies are particularly useful when the goal is to investigate whether there is an association between a medicinal product (or products) and one specific rare adverse event, as well as to identify risk factors for adverse events (or actually, effect-modifiers). Risk factors may include conditions such as renal and hepatic dysfunction, which might modify the relationship between the drug exposure and the adverse event. Under specific conditions, a case-control study may also provide the absolute incidence rate of the event. If all cases of interest (or a well-defined

fraction of cases) in the catchment area are captured and the fraction of controls from the source population is known, an incidence rate can be calculated.

When the source population for the case-control study is a well-defined cohort, it is then possible to select a random sample from it to form the control series. The name “nested case-control study” has been coined to designate those studies in which the control sampling is density-based (e.g. the control series represents the person-time distribution of exposure in the source population). The case-cohort is also a variant in which the control sampling is performed on those persons who make up the source population regardless of the duration of time they may have contributed to it.

A case-control approach could also be set up as a permanent scheme to identify and quantify risks (case-control surveillance). This strategy has been followed for rare diseases with a relevant aetiology fraction attributed to medicinal products, including blood dyscrasias or serious skin disorders.

VIII.App1.1.2.4. Other designs

Other designs have been proposed to assess the association between intermittent exposures and short-term events, including the self-controlled case-series, the case-crossover and the case-time-control studies. In these designs, only cases are used and the control information is obtained from past person-time experience of the cases themselves. One of the important strengths of these designs is that those confounding variables that do not change within individuals are automatically matched.

VIII.App1.1.3. Clinical trials

When significant risks are identified from pre-approval clinical trials, further clinical trials might be called for to evaluate the mechanism of action for the adverse reaction. If the study is a clinical trial, provisions of national regulations of clinical trials shall apply. In some instances, pharmacodynamic and pharmacokinetic studies might be conducted to determine whether a particular dosing instruction can put patients at an increased risk of adverse events. Genetic testing may also provide clues about which group of patients might be at an increased risk of adverse reactions. Furthermore, based on the pharmacological properties and the expected use of the medicinal product in general practice, conducting specific studies to investigate potential drug-drug interactions and food-drug interactions might be called for. These studies may include population pharmacokinetic studies and drug concentration monitoring in patients and normal volunteers.

Sometimes, potential risks or unforeseen benefits in special populations might be identified from pre-approval clinical trials, but cannot be fully quantified due to small sample sizes or the exclusion of subpopulations of patients from these clinical studies. These populations might include the elderly, children, or patients with renal or hepatic disorder. Children, the elderly, and patients with co-morbid conditions might metabolise medicinal products differently than patients typically enrolled in clinical trials. Further clinical trials might be used to determine and to quantify the magnitude of the risk (or benefit) in such populations.

VIII.App1.1.3.1. Large simple trials

A large simple trial is a specific form of clinical trial where large numbers of patients are randomised to treatment but data collection and monitoring is kept to the minimum, consistent with the aims of the study. This design may be used in pharmacovigilance to elucidate the risk-benefit profile of a medicinal product outside of the formal/traditional clinical trial setting and/or to fully quantify the risk of a critical but relatively rare adverse event. The use of the term 'simple' refers to data structure and not data collection. It is used in relation to situations in which a small number of outcomes are measured and the term may not adequately reflect the complexity of the studies undertaken. These studies qualify as clinical trials.

VIII.App1.1.4. Drug utilisation studies

Drug utilisation studies (DUS) describe how a medicinal product is, prescribed and used in routine clinical practice in large populations, including elderly patients, children, pregnant women or patients with hepatic or renal dysfunction, who are often excluded by randomized clinical trials. Stratification by age, gender, concomitant medication and other characteristics allows a comprehensive characterization of treated patients, including the distribution of those factors that may influence clinical, social, and economic outcomes. From these studies, denominator data may be derived for use in determining rates of adverse reactions. DUS have been used to describe the effect of regulatory actions and media attention on the use of medicinal products, as well as to develop estimates of the economic burden of adverse reactions. DUS may be used to examine the relationship between recommended and actual clinical practice. These studies may help to monitor use in everyday medical practice and medication error and to determine whether a medicinal product has potential for abuse by examining whether patients are taking escalating dose regimens or whether there is evidence of inappropriate repeat prescribing.

VIII.App1.2. Data sources

Pharmacoepidemiological studies may be performed using a variety of data sources. Traditionally, field studies were required for retrieving the necessary data on exposure, outcomes, potential confounders and other variables, through interview of appropriate subjects (e.g. patients, relatives) or by consulting the paper-based medical records. However, the advent of automated healthcare databases has remarkably increased the efficiency of pharmacoepidemiologic research. There are two main types of automated databases, those that contain comprehensive medical information, including prescriptions, diagnosis, referral letters and discharge reports, and those mainly created for administrative purposes, which require a record-linkage between pharmacy claims and medical claims databases. These datasets may include millions of patients and allow for large studies. They may not have the detailed and accurate information needed for some research, such as validated diagnostic information or laboratory data, and paper-based medical records should be consulted to ascertain and validate test results and medical diagnoses. Depending on the outcome of interest, the validation may require either a case-by-case approach or just the review of a random sample of cases. Other key aspects may require validation where appropriate. There are many databases in place for potential use in pharmacoepidemiological studies or in their validation phase.

Marketing authorisation holders should select the best data source according to validity (e.g. completeness of relevant information, possibility of outcome validation) and efficiency criteria (e.g. time span to provide results). External validity should also be taken into account. As far as feasible the data source chosen to perform the study should include the population in which the safety concern has been raised. In case another population is involved, the marketing authorisation holder should evaluate the differences that may exist in the relevant variables (e.g. age, sex, pattern of use of the medicinal product) and the potential impact on the results. In the statistical analysis, the potential effect of modification of such variables should be explored.

With any data source used, the privacy and confidentiality regulations that apply to personal data should be followed.

Guideline on good pharmacovigilance practices (GVP) For Arab Countries

GVP: Modules

Module IX – Signal management

IX.A. Introduction

The Report of the Council for International Organisations of Medical Sciences Working group VIII Practical Aspects of Signal Detection in Pharmacovigilance (CIOMS, Geneva 2010) defines a signal as information that arises from one or multiple sources (including observations and experiments), which suggests a new potentially causal association, or a new aspect of a known association, between an intervention and an event or set of related events, either adverse or beneficial, that is judged to be of sufficient likelihood to justify verificatory action.

For the purpose of this Module, only new information related to adverse effects will be considered.

In order to suggest a new potentially causal association or a new aspect of a known association, any signal should be validated taking into account other relevant sources of information.

The signal management process can be defined as the set of activities performed to determine whether, based on an examination of individual case safety reports (ICSRs), aggregated data from active surveillance systems or studies, literature information or other data sources, there are new risks associated with an active substance or a medicinal product or whether known risks have changed. The signal management process shall include all steps from initial signal detection; through their validation and confirmation; analysis and prioritisation; and signal assessment to recommending action, as well as the tracking of the steps taken and of any recommendations made.

The signal management process concerns all stakeholders involved in the safety monitoring of medicinal products including patients, healthcare professionals, marketing authorisation holders (MAHs), regulatory authorities, scientific committees.

Whereas the ADRs database will be a major source of pharmacovigilance information, the signal management process covers signals arising from any source, only signals related to an adverse reaction shall be considered.

In this Module, all applicable legal requirements are referenced as explained in the GVP Introductory Cover Note and are usually identifiable by the modal verb "shall". Guidance for the implementation of legal requirements is provided using the modal verb "should".

The objectives of this Module are:

- to provide general guidance and requirements on structures and processes involved in signal management (section IX.B.);
- to describe how these structures and processes are applied in the setting of the Arab Countries pharmacovigilance and regulatory bodies(section IX.C.).

IX.B. Structures and processes

IX.B.1. Sources of data and information

The sources for identifying new signals are diverse. They potentially include all scientific information concerning the use of medicinal products including quality, non-clinical, clinical,

pharmacovigilance and pharmacoepidemiological data. Specific sources for signals include spontaneous adverse drug reaction (ADR) reporting systems, active surveillance systems, non-interventional studies, clinical trials, scientific literature and other sources of information.

Signals from spontaneous reports may be detected from monitoring of individual case safety reports (ICSRs), ADR databases, articles from the scientific literature or review of information provided by marketing authorisation holders in the context of regulatory procedures (e.g. variations, renewals, post-authorisation commitments, periodic safety update reports (PSURs), Risk Management Plan (RMP) updates or from other activities related to the on-going benefit-risk monitoring of medicinal products.

Spontaneous reports of ADRs may also be notified to poison centres, teratology information services, vaccine surveillance programmes, reporting systems established by marketing authorisation holders, and any other structured and organised data collection schemes allowing patients and healthcare professionals to report suspected adverse reactions related to medicinal products. National medicines authorities should liaise with other institutions or organisations managing such reporting system so as to be informed of these suspected adverse reactions.

Due to the increase in volume of spontaneous reports of (ADRs), the introduction of electronic safety reporting by patients and healthcare professionals and the mandatory electronic submission of case reports from marketing authorisation holders to medicines authorities in Arab Countries, signal detection is now increasingly based on periodic monitoring of large databases of ADRs reports.

Signals may arise from a wide range of different study types, including quality, non-clinical, interventional and non-interventional studies, systematic reviews and meta-analyses. Interventional trials and observational studies may, by design, recruit and follow-up a defined population of subjects who may experience ADRs. Review of aggregated data and statistical analyses may also point to an elevated risk of an adverse event to be further investigated as a signal.

Published results of relevant studies should be identified by marketing authorisation holders by screening the scientific literature. For general guidance on performing literature searches, refer to Module VI.

Marketing authorisation holders should regularly screen internet or digital media under their management or responsibility as specified in Module VI, for potential reports of suspected ADRs, which may characterise a new signal. Marketing authorisation holders and medicines authorities in Arab Countries should seek further information related to suspected ADRs they become aware of from any source. Suspected serious ADRs should be confirmed if possible through other data sources such as “National Pharmacovigilance and Safety reports database” if accessible to MAHs (may be not accessible to MAHs in some Arab Countries) and “Vigibase” of Uppsala Monitoring Centre "UMC" (accessible for only member medicines authorities but not for MAHs).

IX.B.2. Methodology for signal detection

As a general principle, signal detection should follow a recognised methodology, which may vary depending on the type of medicinal product it is intended to cover. Vaccines may for example require other methodological strategies.

The detection of signals shall be based on a multidisciplinary approach. Signal detection within the "National Pharmacovigilance and Safety reports database" or MAH-specific ADRs database shall be complemented by statistical analysis where appropriate.

In order to determine the evidentiary value (i.e. the supporting evidence) of a signal a recognised methodology shall be applied taking into account the clinical relevance, quantitative strength of the association, the consistency of the data, the exposure-response relationship, the biological plausibility, experimental findings, possible analogies and the nature and quality of the data.

Different factors may be taken into account for the prioritisation of signals, namely whether the association or the active substance/medicinal product is new, the strength of the association, the seriousness of the reaction involved and the documentation of the reports in the ADRs database.

IX.B.3. The signal management process

IX.B.3.1. Introduction

The signal management process covers all steps from detecting signals to recommending action(s) as follows:

- signal detection;
- signal validation;
- signal analysis and prioritisation;
- signal assessment;
- recommendation for action;
- exchange of information.

Although these steps generally follow a logical sequence, the wide range of sources of information available for signal detection may require some flexibility in the conduct of signal management e.g.:

- when signal detection is primarily based on a review of individual case safety reports (ICSRs), this activity may include validation and preliminary prioritisation of any detected signal;
- when a signal is detected from results of a study, it is generally not possible or practical to assess each individual case, and validation may require collection of additional data;
- recommendation for action (followed by decision in accordance with the applicable legislation) and exchange of information are components to be considered at every step of the process.

For the purpose of this guidance, signals originating from the monitoring of data from spontaneous reporting systems are considered as the starting point of the signal management process. The same principles should apply for data originating from other sources.

IX.B.3.2. Signal detection

Detailed guidance on methods of signal detection may be found in the Report of CIOMS Working group VIII Practical Aspects of Signal Detection in Pharmacovigilance (CIOMS, Geneva

2010Whichever methods are employed for the detection of signals, the same principles should apply, namely:

- the method used should be appropriate for the data set; for example, the use of complex statistical tools may not be appropriate for smaller data sets;
- data from all appropriate sources should be considered;
- systems should be in place to ensure the quality of the signal detection activity;
- any outputs from a review of cumulative data should be assessed by an appropriately qualified person in a timely manner;
- the process should be adequately documented, including the rationale for the method and periodicity of the signal detection activity.

Detection of signals may be performed based on a review of ICSRs, from statistical analyses in large databases, or from a combination of both.

IX.B.3.2.1. Review of individual case safety reports

As specified in Module VI, ICSRs may originate from a spontaneous reporting system, post-authorisation studies and monitoring of literature. Even a single report of a serious or severe adverse reaction (for example, one case of toxic epidermal necrolysis, aplastic anaemia or liver transplant, or serious adverse event concerning children or pregnancy) may be sufficient to raise a signal and to take further action. A review of ICSRs for this purpose should consider the number of cases (after exclusion of duplicates), the patient's demographics (including age and gender), the suspected medicinal product (including dose administered, formulation) and the suspected adverse reaction (including signs and symptoms), the temporal association, the clinical outcome in relation to drug continuation or discontinuation (i.e. de-challenge / re-challenge information). An assessment of causality of a suspected association should also consider, the presence of potential alternative causes including other concomitant medications, the underlying disease, the reporter's evaluation of causality and the plausibility of a biological and pharmacological relationship.

IX.B.3.2.2. Statistical analyses

Signal detection is now increasingly based on a regular periodic monitoring of large databases of reports of ADRs. Such databases allow generation of statistical reports presenting information on adverse reactions received over a defined time period for defined active substances or medicinal products. Various methods have been developed to identify statistics of disproportionate reporting, i.e. higher reporting than expected for an suspected adverse reaction for an active substance/medicinal product of interest compared to all other active substances/medicinal products in the database, (expressed e.g. as a lower bound of the proportionate reporting ratio >1). Given the limitations of these methods, statistics of disproportionate reporting alone do not necessarily indicate that there is a signal to be further investigated or that a causal association is present.

Use of statistical tools may not be appropriate in all situations. The size of the data set, the completeness of the available information and the severity of the adverse reaction(s) should be taken into account when considering the use of statistical methods and the selection of criteria for the detection of signals.

The periodicity at which statistical reports should be generated and reviewed may vary according to the active substance/medicinal product, its indication and any known potential or identified risks. Some active substances/medicinal products may also be subject to an increased frequency of data monitoring (see IX.C.2.). The duration for this increased frequency of monitoring may also vary and be flexible with the accumulation of knowledge of the risk profile associated with the use of the concerned active substance/medicinal product.

IX.B.3.2.3. Combination of statistical methods and review of individual case safety reports

Statistical reports may be designed to provide tools for identifying suspected adverse reactions that meet pre-defined criteria of frequency, severity, clinical importance, novelty or statistical association. Such filtering tools may facilitate the selection of ICSRs to be reviewed as a first step. The thresholds used in this filtering process (for example, at least 3 cases reported) may vary according to the extent of usage of medicinal products and thus the potential public health impact.

Irrespective of the statistical method used, where statistical reports are used to automate the screening of a database, signal detection should always involve clinical judgement and the corresponding ICSRs should be individually reviewed, considering their clinical relevance (IX.B.3.2.1.)

The statistical method should therefore be a supporting tool in the whole process of signal detection and subsequent validation.

IX.B.3.3. Signal validation

Signal validation is the process of evaluating the data supporting the detected signal in order to verify that the available documentation contains sufficient evidence demonstrating the existence of a new potentially causal association or a new aspect of a known association, and therefore justifies further analysis.

To validate a signal the following should be taken into account:

- Clinical relevance including, for example:
  - strength of evidence for a causal effect (e.g. number of reports, exposure, temporal association, plausible mechanism, de/re-challenge, alternative explanation/confounders);
  - seriousness and severity of the reaction and its outcome;
  - novelty of the reaction (e.g. new and serious adverse reactions);
  - drug-drug interactions;
  - reactions occurring in special populations.
- Previous awareness:
  - the extent to which information is already included in the summary of product characteristics (SmPC) or patient leaflet;
  - whether the association has already been assessed in a PSUR or RMP, or was discussed at the level of a scientific committee or has been subject to a regulatory procedure.

In principle only a new signal for which there is no previous awareness should be validated. However, an already known association may give rise to a new signal if its apparent frequency of reporting, its duration, its severity or a change in the previously reported outcome (such as new fatality) suggests new information as compared with the information included in the SmPC or previously assessed by the competent authority.

- Availability of other relevant sources of information providing a richer set of data on the same association:
  - literature findings regarding similar cases;
  - experimental findings or biological mechanisms;
  - screening of databases with larger datasets [e.g. "National Pharmacovigilance and Safety reports database" when the signal was sourced initially by data from MAH specific database (if accessible to MAH), and UMC Vigibase when the signal was sourced initially from "National Pharmacovigilance and Safety reports database"].

The magnitude and clinical significance of a signal may also be examined by descriptive analyses in other available data sources or by analysis of the characteristics of exposed patients and their medicinal product utilisation patterns.

Signals for which the validity is not confirmed may deserve special attention in subsequent analyses i.e. it may be appropriate to continue to monitor the potential signal until there is enough evidence to confirm the signal. For example, there might be an inadequate case documentation or a supporting evidence of a causal association only in some of the ICSRs. In such scenarios, new cases of the same adverse reaction or follow-up reports of previously received cases should be reviewed at appropriate time intervals to ensure that all relevant cases are considered.

Marketing authorisation holders and national medicines authorities should establish tracking systems to capture the outcome of the validation of signals including the reasons why signals were not validated as well as information that would facilitate further retrieval of ICSRs and validation of signals.

IX.B.3.4. Signal analysis and prioritisation

A key element of the signal management process is to promptly identify validated signals with important public health impact or that may significantly affect the benefit-risk profile of the medicinal product in treated patients. These signals require urgent attention and need to be prioritised for further management without delay. This prioritisation process should consider:

- the impact on patients depending on the severity, reversibility, potential for prevention and clinical outcome of the association;
- the consequences of treatment discontinuation on the disease and the availability of other therapeutic options;
- the strength and consistency of the evidence supporting an association, e.g., biological plausibility, a high number of cases reported in a short period of time, the measure of disproportionality of reporting and rapid increase of that measure over time and identification of

the signal in different settings (e.g. general practice and hospital settings), data sources or countries;

- clinical context (e.g. whether the association suggest a clinical syndrome that may include other reactions);
- the public health impact, including the extent of utilisation of the product in the general population and in special populations (e.g. pregnant women, children or the elderly) and the patterns of medicinal product utilisation (e.g. off-label use or misuse). The public health impact may include an estimation of the number of patients that may be affected by an adverse reaction and this number could be considered in relation to the size of the general population, the population with the target disease and the treated population;
- increased frequency or severity of a known adverse reaction;
- novelty of the suspected adverse reaction, e.g. when an unknown suspected adverse reaction occurs shortly after the marketing of a new medicinal product;
- if a marketing authorisation application for a new active substance is still under evaluation.

In some circumstances, priority can also be given to signals identified for medicinal products or events with potential high media and pharmacovigilance stakeholder interest in order to communicate the result to the public and healthcare professionals as early as possible.

The outcome of signal prioritisation should include a recommendation of the time frame for the management of the signal.

The outcome of the signal prioritisation process should be entered in the tracking system, with the justification for the priority attributed.

IX.B.3.5. Signal assessment

The objective of signal assessment is to further evaluate a validated signal so as to identify the need for additional data collection or for any regulatory action. It consists of an assessment of the available pharmacological, non-clinical and clinical data and information from other sources. This review should be as complete as possible regarding the sources of information, including the application dossier, literature articles, spontaneous reports, expert consultation, and information held by marketing authorisation holders and competent authorities. When information is drawn from a range of sources, the strengths and limitations of each source should be considered in order to assess the contribution they can provide to the overall evaluation of the signal in terms of a recommendation for action. Summarising information from different data sources also requires the choice of an internationally agreed case definition (e.g. Brighton collaboration case definition for vaccines). If no such definition exists, an operational definition should be developed.
Signals may need to be assessed at a broader level e.g. at the therapeutic or system organ class level or at the level of a Standardised MedDRA[49] Query (i.e. SMQ). The search for information to assess the significance of a signal may also need to be extended to other products of the class and to other

[49] MedDRA® the Medical Dictionary for Regulatory Activities terminology is the international medical terminology developed under the auspices of the International Conference on Harmonization of Technical Requirements for Registration of Pharmaceuticals for Human Use (ICH)

adverse reactions, such as to other terms linked to a complex disease (e.g. optic neuritis as a possible early sign of multiple sclerosis), to a prior stage of a reaction (e.g. QT prolongation and torsades de pointes) or to clinical complications of the adverse reaction of interest (e.g. dehydration and acute renal failure).

Gathering information from various sources may take time. For a new signal of a serious or severe adverse reaction, measures should be taken at any stage in the management of a signal including detection, if the information already available supports the conclusion that there is a potential risk that needs to be prevented or minimised in a timely manner.

IX.B.3.6. Recommendation for action

Signal assessment results in a recommendation that either no further action is required at this point in time or a further action is needed. Although the recommendation for action normally takes place in a logical sequence after signal assessment based on the extent of the information, the need for action should be considered throughout the signal management process. For example, the first case of an adverse reaction indicating a manufacturing defect may require immediate recall of a product batch. The review of available information at the signal validation or signal prioritisation stages may similarly conclude that the evidence is sufficiently strong to introduce temporary measures. In such situations, it is still necessary to proceed with a formal assessment of the signal to confirm or not the safety issue in order to extend or lift the temporary measures.

The recommendation for action may include a request for:

- immediate measures including the possibility of suspending the marketing authorisation of the medicinal product;
- additional information to be provided by the marketing authorisation holder, e.g. in order to confirm if a conclusion is valid for all indications and patient groups;
- periodic review of the signal, for example through PSURs (see Module VII);
- additional investigations or risk minimisation activities;
- an update of the product information through a regulatory procedure;
- conduct of a post-authorisation safety study (see Module VIII).

Whenever actions are requested of a marketing authorisation holder, the request should specify a timeframe by which they should be completed, including provision of progress reports and interim results, proportionate to the severity and public health impact of the signal.

IX.B.3.7. Exchange of information

Information on validated signals, Emerging Safety Issues and the outcome of signal assessments should be exchanged between national medicines authorities and marketing authorisation holders.

Marketing authorisation holders should communicate signals that may have implications for public health and the benefit-risk profile of a product immediately to the national medicines authorities as an Emerging Safety Issue (see Module VI), and when appropriate **this should include proposals for action**.

The outcomes of signal assessment involving new or changed risks and risks that have an impact on the benefit-risk balance of the concerned active substance/medicinal products should be communicated to the public including health care professionals and patients as well as to the concerned marketing authorisation holders.

IX.B.4. Quality requirements

IX.B.4.1. Tracking

All validation, prioritisation, assessment, timelines, decisions, actions, plans, reporting as well as all other key steps should be recorded and tracked systematically. Tracking systems should be used for documentation and should also include signals, for which the validation process conducted was not suggestive of a new potentially causal association, or a new aspect of a known association. All records need to be archived (see Module I).

IX.B.4.2. Quality systems and documentation

An essential feature of a signal management system is that it is clearly documented to ensure that the system functions properly and effectively, that the roles, responsibilities and required tasks are standardised, that these tasks are conducted by people with appropriate expertise and are clear to all parties involved and that there is provision for appropriate control and, when needed, improvement of the system. Therefore, a system of quality assurance and quality control consistent with the quality system standards should be in place and applied to all signal management processes (see Module I). Detailed procedures for this quality system should be developed, documented and implemented. The organisational roles and responsibilities for the activities and maintenance of documentation, quality control and review, and for ensuring corrective and preventive action need to be assigned and recorded. This should include the responsibilities for quality assurance auditing of the signal management system, including auditing of sub-contractors. Data and document confidentiality (per the applicable regulations), security and validity (including integrity when transferred) should be guaranteed.

Through their tracking system, all parties should keep an audit trail of their signal management activities and of the relevant queries and their outcomes, including how signals have been detected, validated, confirmed and assessed.

Documentation may be requested from the marketing authorisation holders demonstrating compliance with these provisions and reviewed before and after marketing authorisation.

Staff should be specifically trained in signal management activities in accordance with their roles and responsibilities. The training system and location of the training records should be documented, and curricula vitae and job descriptions should be archived.

IX.C. Operation of Signal management in Arab Countries

IX.C.1. Roles and responsibilities

The national medicines authority should continuously monitor the data available in its "National Pharmacovigilance and Safety reports database", on the other hand the marketing authorisation holder should continuously monitor the data available in its ADRs database and the "National Pharmacovigilance and Safety reports database" of the concerned Arab Country if accessible (may be not accessible in some Arab Countries) to determine whether there are new risks or whether risks have changed and whether those risks have an impact on the benefit-risk balance. A recognised signal detection methodology should be applied and detected signals should be validated, as appropriate.

The national medicines authorities shall validate and confirm any signal that has been detected by them in the course of their continuous monitoring. . A justification should be provided when the signal is not confirmed.

IX.C.1.1. Roles and responsibilities of the national medicines authorities

- Each national medicines authority in the Arab Countries shall specifically monitor data originated in its territory, including data arising from sources mentioned in IX.B.1.
- The national medicines authority shall do the following for substances/medicinal products authorised in its territory
- shall **monitor** the data of the "National Pharmacovigilance and Safety reports database" ;
- shall **validate and confirm** any signal it has detected;
- shall prioritise validated and confirmed signals for further assessment
- shall **enter** validated and confirmed signal it has detected into a Pharmacovigilance Issues Tracking Tool (PITT);
- shall **confirm** as soon as possible any validated signal communicated by a marketing authorisation holder for an active substance/medicinal product authorised in its territory. In this context, where the validity of the signal is not confirmed, special attention shall be paid to any follow-up information which may allow for the signal's confirmation , see IX.B.3.3
- should validate and enter into PITT any other signal communicated by a third party (e.g. regulatory authority from other Arab, non- Arab Country or from the UMC) for these substances/medicinal products.
- inform the concerned marketing authorisation holder(s) of the conclusions of the assessment of any confirmed signal ;
- shall take the appropriate action following the signal assessment;
- The national medicines authorities should keep an audit trail of its signal detection activities.
- In addition the national medicines authority as appropriate:

- may maintain, review and publish a list of medical events that have to be taken into account for the detection of a signal ;
- ensure appropriate support for the monitoring of the data in "National Pharmacovigilance and Safety reports database" by marketing authorisation holders (applicable in only some Arab Countries);
- administer a Pharmacovigilance Issues Tracking Tool (PITT) for validated signals that require further assessment ;
- perform a regular review of the signal management methodology to be used and publish recommendations as appropriate ;

IX.C.1.2. Roles and responsibilities of marketing authorisation holder

The marketing authorisation holder should continuously monitor the safety of its medicinal products and inform the authorities of any changes that might have an impact on the marketing authorisation.

The marketing authorisation holder:

- shall monitor the data in its ADRs database; as well as monitor the data in "National Pharmacovigilance and Safety reports database" to the extent of their accessibility (accessible in only some Arab Countries) . The frequency of the monitoring should be at least once monthly and shall be proportionate to the identified risk, the potential risk and the need for additional information ;
- shall validate any signal detected and shall forthwith inform the responsible medicines authority for signal detection with special attention to those in the list as published by the national medicines authority . For the validation step, the elements of information presented in IX.B.3.3. should be taken into account;
- should notify in writing as an Emerging Safety Issue to the medicines authorities in Arab Countries where the medicinal product is authorised (see also Module VI), any safety issue arising from its signal detection activity which could have a significant impact on the benefit-risk balance for a medicinal product and/or have implications for public health;
- should collaborate with the national medicines authority for the assessment of the signals by providing additional information upon request;
- should keep an audit trail of its signal detection activities.

IX.C.2. Periodicity of data monitoring in "National Pharmacovigilance and Safety reports database"

National medicines authorities shall ensure the continuous monitoring of data in the "National Pharmacovigilance and Safety reports database" with a frequency proportionate to the identified risk, the potential risk and the need for additional information. The monitoring should be based on a periodic review of statistical outputs (e.g. reaction monitoring reports) to determine whether there are new or changed risks in the safety profile of an active substance/medicinal product. The

statistical outputs should contain ADRs in a structured hierarchy (e.g. MedDRA hierarchy) by active substance(s)/medicinal product(s) and allow filters and thresholds to be applied on several fields as appropriate.

The baseline frequency for reviewing the statistical outputs from "National Pharmacovigilance and Safety reports database" should be once- monthly. An increase to the baseline frequency of this data monitoring may be decided by the the national medicines authority if justified by the identified or potential risks of the product or by the need for additional information.

For products subject to additional monitoring (see Module X), the frequency for reviewing the statistical outputs should be every 2 weeks until the end of additional monitoring. A 2-week frequency for reviewing the statistical outputs may also be applied for any other product taking into account the following criteria:

- any product considered to have an identified or potential risk that could impact significantly on the benefit-risk balance or have implications for public health. This may include risks associated with significant misuse, abuse or off-label use. The product may be moved back to baseline frequency of monitoring if risks are not confirmed;
- any product for which the safety information is limited due to low patient exposure during drug development, including products authorised under conditional approval or under exceptional circumstances[50], or for which there are vulnerable or poorly studied patient populations or important missing information (e.g. children, pregnant women, renal-impaired patients) while post-marketing exposure is likely to be significant;
- any product that contains active substances already authorised in the Arab Country concerned but is indicated for use in a new patient population or with a new route of administration;
- any product for which the existing marketing authorisation has been significantly varied (e.g. changes to indication, posology, pharmaceutical form or route of administration), thereby modifying the exposed patient population or the safety profile.

Confirmation of a signal arising from the "National Pharmacovigilance and Safety reports database" data monitoring activities does not necessarily imply that the product has to be more frequently monitored and a risk proportionate approach should be applied.

More frequent monitoring than every 2 weeks may be proposed. It should be targeted to a safety concern of interest especially during public health emergencies (e.g. pandemics) and may be applied in the context of customised queries.

IX.C.3. Processes for regulatory follow-up in the Arab Countries

The national medicines authority may decide on any or a combination of the following actions:

- the marketing authorisation holder should conduct further evaluation of data and provide the

[50] Exceptional circumstances is a type of marketing authorisation granted to medicines where the applicant is unable to provide a comprehensive data on the efficacy and safety under normal conditions of use, because the condition to be treated is rare or because collection of full information is not possible or is unethical. (may be NOT applicable in some Arab Countries, check the national regulations)

results of that evaluation according to a defined timeline;

- the marketing authorisation holder should submit an *ad-hoc* PSUR;
- the marketing authorisation holder should sponsor a post-authorisation study according to an agreed protocol and submit the final results of that study;
- the marketing authorisation holder should be requested to submit a RMP or an updated RMP;
- the marketing authorisation holder should take any measures that are required for ensuring the safe and effective use of the medicinal product;
- the marketing authorisation should be varied, suspended, revoked or not renewed;
- urgent safety restrictions may be imposed;
- an inspection should take place in order to verify that the marketing authorisation holder for the medicinal product satisfies the pharmacovigilance requirements;
- the medicinal product should be included in the list of medicinal products that are subject to additional monitoring.

Where decided by the national medicines authority; a procedure should be initiated with a timetable in which the marketing authorisation should be varied, suspended, revoked or not renewed where applicable.

IX.C.4. Signal record management in the Arab Countries

The national medicines authorities shall keep an audit trail of all their signal management activities and of the relevant queries and their outcomes.

Any signal that has been detected and validated by the national medicines authority in line with the processes described in section IX.B. should be entered into a Pharmacovigilance Issues Tracking Tool (PITT). All subsequent evaluations, timelines, decisions, actions, plans, reporting and all other key steps should be recorded and tracked systematically in PITT by the national medicines authority.

Guideline on good pharmacovigilance practices (GVP) For Arab Countries

GVP: Modules

Module X– Additional monitoring

X.A. Introduction

Pharmacovigilance is a vital public health function with the aim of rapidly detecting and responding to potential safety hazards associated with the use of medicinal products.

A medicinal product is authorised on the basis that, its benefit-risk balance is considered to be positive at that time for a specified target population within its approved indication (s). However, not all risks can be identified at the time of initial authorisation and some of the risks associated with the use of a medicinal product emerge or are further characterised in the post-authorisation phase of the product's lifecycle. To strengthen the safety monitoring of medicinal products, this guideline has introduced a framework for enhanced risk proportionate post-authorisation data collection for medicinal products, including the concept of additional monitoring for certain medicinal products.

National Medicines Authorities, shall set up, maintain and make public a list of medicinal products that are subject to additional monitoring (hereafter referred to as "the list").

These medicinal products will be readily identifiable by an inverted equilateral black triangle. ▼ That triangle will be followed by an explanatory statement in the summary of product characteristics (SmPC) as follows:

> ***"This medicinal product is subject to additional monitoring. This will allow quick identification of new safety information. Healthcare professionals are asked to report any suspected adverse reactions. See section ..... for how to report adverse reactions."***

A similar statement will also be included in the package leaflet. This explanatory statement should encourage healthcare professionals and patients to report all suspected adverse reactions.

Post-authorisation spontaneous Adverse Drug Reactions (ADR) reports remain a cornerstone of pharmacovigilance. Data from ADR reports is a key source of information for signal detection activities (see Module IX). Increasing the awareness of healthcare professionals and patients of the need to report suspected adverse drug reactions and encouraging their reporting is therefore an important means of monitoring the safety profile of a medicinal product.

The concept of additional monitoring originates primarily from the need to enhance the ADR reporting rates for newly authorised products for which the safety profile might not be fully characterised or for products with newly emerging safety concerns that also need to be better characterised. The main goals are to collect additional information as early as possible to further elucidate the risk profile of products when used in clinical practice and thereby informing the safe and effective use of medicinal products.

This Module is divided in two sections:

- X.B. provides general principles for assigning additional monitoring status to medicinal products and on communication and transparency aspects.
- X.C. describes the operation in the Arab Countries regarding the supervision of additional monitoring status, the communication strategy and the impact on pharmacovigilance activities.

X.B. Structures and processes

X.B.1. Principles for assigning additional monitoring status to a medicinal product

All medicines are authorised on the basis that the benefit of treatment is considered to outweigh the potential risks. To come to this conclusion for a marketing authorisation, data from clinical trials conducted during the development of a medicine are assessed. However, adverse reactions which occur rarely or after a long time may become apparent only once the product is used in a wider population and/or after long term use. In addition, the benefits and risks of a medicine may have been evaluated in conditions which may differ from those in everyday medical practice, e.g. clinical trials might exclude certain types of patients with multiple co-morbidities or concomitant medications. Therefore, after a medicine is placed on the market, its use in the wider population requires continuous monitoring. Marketing authorisation holders and national medicines authorities continuously monitor medicinal products for any information that becomes available and assess whether it impacts on the benefit-risk profile of the medicinal product. However, for certain medicinal products enhanced post-authorisation data collection is needed to ensure that any new safety hazards are identified as promptly as possible and that appropriate action can be initiated immediately. Therefore, in order to strengthen the monitoring of certain medicinal products and in particular to encourage the spontaneous reporting of ADRs, the concept of additional monitoring has been introduced.

Additional monitoring status can be assigned to a medicinal product at the time of granting a marketing authorisation or in some cases at later stages of the product life cycle for a medicinal product for which a new safety concern has been identified. The additional monitoring status is particularly important when granting marketing authorisation **for medicinal products containing a new active substance and for all biological medicinal products**, which are priorities for pharmacovigilance. National medicines authorities may also require additional monitoring status for a medicinal product which is subject to specific obligations e.g. the conduct of a Post-Authorisation Safety Study (PASS) or restrictions with regards to the safe and effective use of the medicinal product.

X.B.2. Communication and transparency

The additional monitoring status needs to be communicated to healthcare professionals and patients in such a way that it increases reporting of suspected adverse reactions without creating undue alarm. This can be achieved for example by highlighting the need to better characterise the safety profile of a new medicinal product by identifying additional risks but placing those potential risks in the context of the known benefits for this product. A publicly available list of medicinal products with additional monitoring status should be kept up to date by the national medicines authorities. In addition, healthcare professionals and patients should be enabled to easily identify those products through their product labelling. The publication of the list together with appropriate communication should encourage healthcare professionals and patients to report all suspected adverse drug reactions for all medicinal products subject to additional monitoring.

X.C. Operation of the additional monitoring in Arab countries

X.C.1. Criteria for including a medicinal product in the additional monitoring list

X.C.1.1. Mandatory scope

It is mandatory to include the following categories of medicinal products in the list:

- medicinal products that contain a new active substance which, on 1 July 2015, was not contained in any innovative medicinal product;
- any biological medicinal product not covered by the previous category and authorised after 1 July 2015;
- products for which a PASS was requested at the time of marketing authorisation
- products authorised with specific obligations on the recording or suspected adverse drug reactions
- products for which a PASS was requested following the grant of marketing authorisation
- products which were granted a conditional marketing authorisation
- products authorised under exceptional circumstances[51].

X.C.1.2. Optional scope

There is the possibility that national medicines authority to include in the list medicinal products subject to conditions, not falling under the mandatory scope. The situations that could form the basis for inclusion in the list are:

- When a marketing authorisation is granted subject to one or more of the following:
  - conditions or restrictions with regard to the safe and effective use of the medicinal product
  - measures for ensuring the safe use of the medicinal product to be included in the risk management system;
  - an obligation to conduct a post-authorisation efficacy study;
  - the existence of an adequate pharmacovigilance system;

The scope of the above does not only include medicinal products which are authorised or for which conditions are established in the concerned Arab Country after becoming into effect the new “Good Pharmacovigilance Practice in Arab Countries” but also medicinal products which were authorised

[51] Exceptional circumstances is a type of marketing authorisation granted to medicines where the applicant is unable to provide comprehensive data on the efficacy and safety under normal conditions of use, because the condition to be treated is rare or because collection of full information is not possible or is unethical. (may be NOT applicable in some Arab Countries, check the national regulations)

or made subject to conditions before such date, provided they fall within one or more of the above situations for the optional scope.

Pharmacovigilance rules in general and additional monitoring specifically take into account that the full safety profile of medicinal products can only be confirmed after products have been placed on the market. Due consideration should, therefore, be given to the merit of inclusion of a medicinal product in the list in terms of increasing awareness about the safe and effective use of a medicinal product and/or providing any additional information for the evaluation of the product. In this regard, the decision to include a medicinal product subject to conditions in the list should take account of the nature and scope of the conditions or obligations placed on the marketing authorisation including their potential public health impact. The decision should also consider the usefulness of the additional monitoring status in relation to other additional pharmacovigilance activities proposed in the risk management plan, for example in relation to the objectives of PASS.

X.C.2. Criteria for defining the initial time period of maintenance in the additional monitoring list

X.C.2.1. Mandatory scope

For medicinal products containing new active substances as well as for all biological medicinal products approved after 1 July 2015, the initial period of time for inclusion is five years after the marketing authorisation date in the concerned Arab Country.

X.C.2.2. Optional scope

The period of time for inclusion in the list of medicinal products authorised subject to conditions is decided by the medicines authority in the Arab Country concerned, and it is linked to the fulfilment of the conditions and obligations placed on the marketing authorisation.

If new conditions are imposed to the marketing authorisation during a product's lifecycle, it is envisaged that a medicinal product previously removed from the list can be added to the list again if criteria for inclusion are met again.

X.C.3. Roles and responsibilities

X.C.3.1. National medicines authority

- The national medicines authority: decide which authorised medicinal product should be subject to additional monitoring (see X.C.1) and therefore included in the list;
- is responsible for publishing the list of medicinal products authorised in its territory that are subject to additional monitoring on its official website where the product information is publicly available (if applicable);
- is responsible for removing medicinal products from the list after a pre-determined time period;

- will take into account the list of authorised medicinal products subject to additional monitoring in determining the frequency and processes of its signal detection activities;
- will inform the relevant MAH when an authorised medicinal product has been included to the list of additional monitored products;

X.C.3.2. The Marketing authorisation holder

The marketing authorisation holder:

- shall include in the SmPC and Package leaflet of their medicinal products subject to additional monitoring the black triangle symbol ▼ and the standardised explanatory statement on additional monitoring;
- should include information on the status of additional monitoring in any material to be distributed to healthcare professionals and patients and should make all efforts to encourage reporting of adverse reactions, as agreed with national medicines authorities;
- should provide evidence to the medicines authorities concerned on the status of any conditions imposed by them;
- should submit the relevant variation to include/remove the black symbol, the statement, and the standardised explanatory sentence from the SmPC and PL, where applicable.

X.C.4. Creation and maintenance of the list

Each national medicines authority shall set up, maintain and make public a list of medicinal products that are subject to additional monitoring. This list will include the names and active substances of all medicinal products subject to additional monitoring. Only medicinal products that fall under the mandatory scope will be automatically included in the list. For medicinal products that fall under the optional scope, consultation with the national pharmacovigilance advisory committee may be required.

In addition, national medicines authorities and marketing authorisation holders should take all appropriated measures to encourage patients and health care professional to report any suspected adverse drug reactions.

As this guideline was based on the European Good Pharmacovigilance Practice (GVP), and for the purpose of synchronization and not reinventing the wheel; the "Additional Monitoring List" published by the EMA will be adopted in the Arab Countries. The list will be updated monthly. Nevertheless, each medicines authority in the Arab Countries reserves the rights to add or remove any medicinal product from the additional monitoring list effective in its country as appropriate.

X.C.5. Black symbol and explanatory statements

For medicinal products included in the list, the SmPC shall include the statement:

> ***"This medicinal product is subject to additional monitoring. This will allow quick identification of new safety information. Healthcare professionals are asked to report any suspected adverse reactions. See section ..... for how to report adverse reactions.",***

preceded by an inverted equilateral black triangle. A similar statement will also be included in the package leaflet. Once the medicinal product is included or removed from the list, the marketing authorisation holder shall update the SmPC and the package leaflet to include or remove, as appropriate, the black symbol, the statement, and the standardised explanatory statement.

If the decision to include or remove a medicinal product from the list is done during the assessment of a regulatory procedure (e.g. marketing authorisation application, extension of indication, renewal) the SmPC and the package leaflet should be updated before finalisation of the procedure in order to include or remove the black triangle symbol and explanatory statement from the product information.

If the decision to include or remove a medicinal product from the list is done outside a regulatory procedure, then the marketing authorisation holder is requested to subsequently submit a variation to update the product information of that product accordingly.

X.C.6. Transparency

Each Arabian Medicines Authority should make publicly available the list of the names and active substances of all medicinal products approved in their countries subject to additional monitoring and the general criteria to include medicinal products in the list.

The list will include an electronic link(s) to the relevant webpage where the product information is publicly available (if applicable).

Guideline on good pharmacovigilance practices (GVP)
For Arab Countries

GVP: Modules

Module XI - Public participation in pharmacovigilance

Underdevelopment, expected release fourth quarter 2016

Guideline on good pharmacovigilance practices (GVP)
For Arab Countries

GVP: Modules

Module XII - Continuous pharmacovigilance, ongoing benefit-risk evaluation, regulatory action and planning of public communication

Under development, expected release fourth quarter 2016

Guideline on good pharmacovigilance practices (GVP)
For Arab Countries

GVP: Modules

Module XIII - is no longer under development. All topics originally intended to be covered in this module are now to be included in module XII

Guideline on good pharmacovigilance practices (GVP) For Arab Countries

GVP: Modules

Module XIV - International cooperation

Underdevelopment, expected release fourth quarter 2016

Guideline on good pharmacovigilance practices (GVP)
For Arab Countries

GVP: Modules

Module XV – Safety communication

XV.A. Introduction

This Module provides guidance to marketing authorisation holders (MAHs), national medicines authorities on how to communicate and coordinate safety information in the Arab countries. Communicating safety information to patients and healthcare professionals is a public health responsibility and is essential for achieving the objectives of pharmacovigilance in terms of promoting the rational, safe and effective use of medicines, preventing harm from adverse reactions and contributing to the protection of patients' and public health.

Safety communication is a broad term covering different types of information on medicines, including statutory information as contained in the product information (i.e. the summary of product characteristics (SmPC), package leaflet (PL) and the labelling of the packaging). Although some principles in this Module (i.e. Section XV.B.1 and B.2.) apply to all types of safety communication, the module itself focuses on the communication of 'new or emerging safety information', which means new information about a previously known or unknown risk of a medicine which has or may have an impact on a medicine's benefit-risk balance and its condition of use. Unless otherwise stated, the term 'safety communication' in this module should be read as referring to emerging safety information.

Communication of important new safety information on medicinal products should take into account the views and expectations of concerned parties, including patients and healthcare professionals, with due consideration given to relevant legislation. This Module addresses some aspects of the interaction with concerned parties and supplements the specific guidance will be given in Module XI on public participation as well as the guidance on communication planning will be given in Module XII.

Communication is distinct from transparency, which aims to provide public access to information related to data assessment, decision-making and safety monitoring performed by competent authorities.

Section XV.B. of this Module describes principles and means of safety communication. Section XV.C. provides guidance on the coordination and dissemination of safety communications in the Arab Countries. Both sections give particular consideration to direct healthcare professional communications (DHPCs), and provide specific guidance for preparing them. This is because of the central importance of DHPCs in targeting healthcare professionals and because of the level of coordination required between marketing authorisation holders and national medicines authorities in their preparation.

XV.B. Structures and processes

XV.B.1. Objectives of safety communication

Safety communication aims at:

- providing timely, evidence-based information on the safe and effective use of medicines;

- facilitating changes to healthcare practices (including self-medication practices) where necessary;
- changing attitudes, decisions and behaviours in relation to the use of medicines;
- supporting risk minimisation behaviour;
- facilitating informed decisions on the rational use of medicines.

In addition to the above effective, high quality safety communication can support public confidence in the regulatory system.

XV.B.2. Principles of safety communication

The following principles of safety communication should be applied:

- The need for communicating safety information should be considered throughout the pharmacovigilance and risk management process, and should be part of risk assessment (see Module XII).
- There should be adequate coordination and cooperation between the different parties involved in issuing safety communications (e.g. medicines authorities, other public bodies and marketing authorisation holders).
- Safety communication should deliver relevant, clear, accurate and consistent messages and reach the right audiences at the right time for them to take appropriate action.
- Safety communication should be tailored to the appropriate audiences (e.g. patients and healthcare professionals) by using appropriate language and taking account of the different levels of knowledge and information needs whilst maintaining the accuracy and consistency of the information conveyed.
- Information on risks should be presented in the context of the benefits of the medicine and include available and relevant information on the seriousness, severity, frequency, risk factors, time to onset, reversibility of potential adverse reactions and, if available, expected time to recovery.
- Safety communication should address the uncertainties related to a safety concern. This is of particular relevance for emerging information which is often communicated while medicines authorities are conducting their evaluations; the usefulness of communication at this stage needs to be balanced against the potential for confusion if uncertainties are not properly represented.
- Information on competing risks such as the risk of non-treatment should be included where appropriate.
- The most appropriate quantitative measures should be used when describing and comparing risks, e.g. the use of absolute risks and not just relative risks; for risk comparisons, denominators should be the same in size. The use of other tools such as graphical presentation of the risk and/or the benefit-risk balance may also be used.
- Patients and healthcare professionals should, where possible, be consulted and messages pre-tested early in the preparation of safety communication, particularly on complex safety concerns

- Where relevant safety communication should be complemented at a later stage with follow-up communication e.g. on the resolution of a safety concern or updated recommendations.
- The effectiveness of safety communication should be evaluated where appropriate and possible (see XV.B.7.).
- Safety communications should comply with relevant requirements relating to individual data protection and confidentiality.

XV.B.3. Target audiences

The primary target audiences for safety communication issued by regulatory authorities and marketing authorisation holders should be patients and healthcare professionals who use (i.e. prescribe, handle, dispense, administer or take) medicinal products.

As primary target audiences, healthcare professionals play an essential role. Effective safety communication enables them to give clear and useful information to their patients, thereby promoting patient safety and confidence in the regulatory system. Both healthcare professionals in clinical practice and those involved in clinical trials should be provided with appropriate information on any safety concern at the same time.

Patient, consumer and healthcare professional organisations can play a role as multipliers as they can disseminate important safety information to target audiences.

The media is also a target audience for safety communication. The capacity of the media to reach out to patients, healthcare professionals and the general public is a critical element for amplifying new and important information on medicines. The way safety information is communicated through the media will influence the public perception and it is therefore important that the media receives safety information directly from the national medicines authorities in addition to the information they receive from other sources, such as from the marketing authorisation holders.

XV.B.4. Content of safety communication

Taking into account the principles in XV.B.2., safety communication should contain:

- important emerging information on any authorised medicinal product which has an impact on the medicine's benefit-risk balance under any conditions of use;
- the reason for initiating safety communication clearly explained to the target audience;
- any recommendations to healthcare professionals and patients on how to deal with a safety concern;
- when applicable, a statement on the agreement between the marketing authorisation holder and the national medicines authority on the safety information provided;
- information on any proposed change to the product information (e.g. the summary of product characteristics (SmPC) or package leaflet (PL));
- a list of literature references, when relevant or a reference to where more detailed information can be found;

- where relevant, a reminder of the need to report suspected adverse reactions in accordance with national spontaneous reporting systems.

The information in the safety communication shall not be misleading and shall be presented objectively. Safety information should not include any material or statement which might constitute advertising.

XV.B.5. Means of safety communication

Communication tools and channels[52] have become more numerous and varied over time, offering the public more information than was previously possible. The use of this increasing variety of means should be considered when issuing safety communication in order to reach the target audiences and meet their growing expectations. Different communication tools and channels are discussed below in sections XV.B.5.1.-XV-B.5.9.

XV.B.5.1. Direct healthcare professional communication (DHPC)

A direct healthcare professional communication (DHPC) is defined in this document as a communication intervention by which important safety information is delivered directly to individual healthcare professionals by a marketing authorisation holder or a medicines authority (in special cases), to inform them of the need to take certain actions or adapt their practices in relation to a medicinal product. DHPCs are not replies to enquiries from healthcare professionals, nor are they meant as educational material for routine risk minimisation activities.

The preparation of DHPCs involves cooperation between the marketing authorisation holder and the national medicines authority. Agreement between these two parties should be reached before a DHPC is issued by the marketing authorisation holder. The agreement will cover both the content of the information (see XV.B.4.) and the communication plan, including the intended recipients, the timetable for disseminating the DHPC and the dissemination mechanism.

Where there are several marketing authorisation holders of the same active substance for which a DHPC is to be issued, a single consistent message should normally be delivered.

Whenever possible, it is advised that healthcare professionals' organisations or learned societies are involved as appropriate during the preparation of DHPCs to ensure that the information they deliver is useful and adapted to the target audience.

A DHPC may be complemented by other communication tools and channels and the principle of providing consistent information should apply (XV.B.2.).

A DHPC may be an additional risk minimisation measure as part of a risk management plan (see Modules V and XV).

<u>A DHPC should be disseminated in the following situations when there is a need to take immediate action or change current practice in relation to a medicinal product:</u>

[52] For the purpose of this section tools and channels are presented without distinction as they often overlap and there is no general agreement on their categorisation

- suspension, withdrawal or revocation of a marketing authorisation for safety reasons;
- an important change to the use of a medicine due to the restriction of an indication, a new contraindication, or a change in the recommended dose due to safety reasons;
- a restriction in availability or discontinuation of a medicine with potential detrimental effects on patient care.

Other situations where dissemination of a DHPC should be considered are:

- new major warnings or precautions for use in the product information;
- new data identifying a previously unknown risk or a change in the frequency or severity of a known risk;
- substantiated knowledge that the medicinal product is not as effective as previously considered;
- new recommendations for preventing or treating adverse reactions or to avoid misuse or medication error with the medicinal product;
- ongoing assessment of an important potential risk, for which data available at a particular point in time are insufficient to take regulatory action (in this case, the DHPC should encourage close monitoring of the safety concern in clinical practice and encourage reporting, and possibly provide information on how to minimise the potential risk).

A national medicines authority may disseminate (in special cases) or request the marketing authorisation holder to disseminate a DHPC in any situation where the national medicines authority considers it necessary for the continued safe and effective use of a medicinal product.

XV.B.5.2. Documents in lay language

Communication material in lay language (e.g. using a questions & answers format) helps patients and the general public to understand the scientific evidence and regulatory actions relating to a safety concern. Lay language documents should contain the recommendations agreed by the national medicines authority and advice for risk minimisation for patients and healthcare professionals in relation to the safety concern, and should be accompanied by relevant background information.

Lay language documents are generally useful to members of the public who have an interest in the subject but do not have a scientific or regulatory background. Reference should be made to other communication materials on the topic to direct readers to where they can find further information.

National medicines authorities publish lay language documents on their national medicines web-portals and may additionally disseminate them to relevant parties such as patients and healthcare professionals' organisations.

Whenever possible, it is advised that patients and healthcare professionals are involved during the preparation of lay language documents to ensure that the information they deliver is useful and adapted to the target audience.

XV.B.5.3. Press communication

Press communication includes press releases and press briefings which are primarily intended for journalists.

National medicines authorities may send press releases directly to journalists in addition to publishing them on their websites. This ensures that journalists, in addition to obtaining information from other sources, receive information that is consistent with the authority's scientific assessment. Interaction with the media is an important way to reach out to a wider audience as well as to build trust in the regulatory system.

Press releases may also be prepared and published by marketing authorisation holders. Their press releases may reflect the position of the marketing authorisation holder on a safety topic but should also make reference to any regulatory action taken by the national medicines authority. **Relevant ongoing reviews should be mentioned** in any communication by the marketing authorisation holder.

Although aimed at journalists, press releases will be read by other audiences such as healthcare professionals, patients and the general public. Reference should therefore be made to related communication materials on the topic. In cases where a DHPC is also prepared, healthcare **professionals should ideally receive it prior to or around the same time of the publication** or distribution of a press release so that they are better prepared to respond to patients.

Press briefings with journalists should be considered by national medicines authorities for safety concerns or other matters relating to the safety of medicinal products that are of high media interest or when complex or public-health-sensitive messages need to be conveyed.

XV.B.5.4. Website

A website is a key tool for members of the public (including patients and healthcare professionals) actively searching the internet for specific information on medicinal products. National medicines authorities as well as marketing authorisation holders should ensure that important safety information published on websites under their control is easily accessible and understandable by the public. Information on websites should be kept up-to-date, with any information that is out-of-date marked as such or removed. If possible, the official website of the national medicines authority should contain information on all medicines authorized in its Arab Country.

XV.B.5.5. Other web-based communications

Online safety information may also be disseminated via other web tools. When using newer, more rapid communication channels, special attention should be paid to ensure that the accuracy of the information released is not compromised. Communication practices should take into account emerging communication tools used by the various target audiences.

XV.B.5.6. Bulletins and newsletters

Bulletins and newsletters provide at regular intervals new information about medicines and their safety and effectiveness. National medicines authorities can reach a large audience with these tools

by using web- based and other available means.

XV.B.5.7. Inter-authority communication

When one medicines authority takes regulatory action on a particular safety concern, other authorities may need to respond to enquiries or communicate on the same issue. The use of inter-authority communication material, such as lines-to-take should be considered. Lines-to-take are documents specifically prepared by a medicines authority to assist its own staff and those of co-operating authorities in responding to external enquires or communicating on a specific safety issue.

XV.B.5.8. Responding to enquiries from the public

National medicines authorities and marketing authorisation holders should have systems in place for responding to enquiries about medicines from individual members of the public. Responses should take into account the information which is in the public domain and should include the relevant recommendations to patients and healthcare professionals issued/agreed by national medicines authorities. **Where questions relate to individual treatment advice, the patient should be advised to contact a healthcare professional**.

XV.B.5.9. Other means of communication

In addition to those discussed above, there are other tools and channels such as publications in scientific journals and journals of professional bodies.

Some tools and channels may be used in the context of risk management; risk minimisation measures often include specific programmes for risk communication. Tools used in such programmes, such as patient alert cards or healthcare professional safety guidance, are outside the scope of this module and will be described in more detail in Module XVI.

XV.B.6. Effectiveness of safety communication

Safety communication is considered effective when the message transmitted is received and understood by the target audience in the way it was intended, and appropriate action is taken by the target audience. Adequate mechanisms should be introduced in order to measure the effectiveness of the communication based on clear objectives. Measuring effectiveness allows lessons to be learned and helps in making decisions on prioritising and adapting tools and practices to meet the needs of the target audiences. A research-based approach will normally be appropriate in order to establish that safety communications have met the standard of XV.B.2. This approach may measure different outcomes, including behaviour, attitudes, and knowledge. When evaluating the effectiveness of safety communication, the scope of the evaluation may be broadened to include factors other than the performance of the individual tools used in the safety communication.

In the case of DHPCs, the marketing authorisation holder should be responsible for evaluating the dissemination of the DHPCs they prepare and should inform the medicines authorities of the outcome and of any difficulties identified (e.g. problems related to the list of recipients or the timing and mechanism of dissemination). Appropriate action should be taken as needed to correct the situation or prevent similar problems in the future.

XV.B.7. Quality system requirements for safety communication

In accordance with the quality system requirements in Module I, procedures should be in place to ensure that safety communications comply with the principles in XV.B.2. as appropriate.

In particular, the communications should be subject to quality controls to ensure their accuracy and clarity. For this purpose review procedures with allocated responsibilities should be followed and documented.

XV.C. Operation in Arab Countries

XV.C.1. Sharing of safety announcements in the Arab Countries

Patients and healthcare professionals increasingly look at national medicines authorities as providers of important information on medicines. A good level of coordination of safety communication in the Arab Country concerned is of particular importance so that healthcare professionals and patients receive consistent information on regulatory decisions.

When issuing safety announcements, national medicines authorities may make use of the different tools and channels described in XV.B.5. .

For active substances contained in medicinal products authorised in more than one Arab country, national medicines authorities in those countries may (if applicable) inform each other about the released safety announcements especially those of major health relevance e.g. the following:

- the suspension, withdrawal or revocation of a marketing authorisation due to changes to its benefit-risk balance;
- restriction of indication or treatment population or the addition of a new contraindication;
- dissemination of a DHPC agreed by relevant national medicines authorities;
- other emerging safety concerns judged by a national medicines authority to be likely to give rise to public or media interest (e.g. a publication of important safety findings in a (scientific) journal, safety-related regulatory action taken in other countries outside Arab Countries).

It is recommended that safety announcements by the national medicines authority to be done in cooperation with the concerned marketing authorisation holder(s). Whenever possible, the national medicines authorities recommended to provide any safety announcement prior to its publication to the concerned marketing authorisation holder(s) (except in urgent situation). Any information of a personal or commercially confidential nature shall be deleted unless its public disclosure is necessary for the protection of public health.

As a complement to the coordination of safety announcements within the Arab countries, national medicines authorities in Arab countries should interact with concerned stakeholders in their countries (mainly patients' and healthcare professionals' organisations), who can play a key role in reviewing and disseminating information to the end users (patients and healthcare professionals). It is recommended that national medicines authorities keep up-to-date contact details of relevant patients, and healthcare professionals' organisations.

XV.C.1.1. Requirements for the marketing authorisation holder in the Arab Countries

As soon as a marketing authorisation holder intends to make a public announcement relating to information on pharmacovigilance concerns in relation to the use of a medicinal product and in any event, before the public announcement is made, the marketing authorisation holder shall be required to inform the medicines authorities in the Arab Country (s). Informing the authorities at the same time as the public (i.e. without advance notice to the authorities) should only occur exceptionally and under justified grounds. Whenever possible, the information should be provided under embargo at least 24 hours prior to its publication.

The marketing authorisation holder shall ensure that information to the public is presented objectively and is not misleading.

Whenever a marketing authorisation holder becomes aware that a third party intends to issue communication that could potentially impact the benefit-risk balance of a medicinal product authorised in Arab countries, the marketing authorisation holder should inform the medicines authorities in the Arab Country(s) concerned and make every effort to share the content of the communications with the relevant authorities.

XV.C.1.2. Consideration for third parties

Third parties (e.g. scientific journals, learned societies, patients' organisations) are encouraged to inform the national medicines authorities in Arab countries of any relevant emerging information on the safety of medicines authorised in these Arab Countries and, if publication is planned, to share the information ahead of publication.

XV.C.2. Direct healthcare professional communications in the Arab Countries

A direct healthcare professional communication (DHPC) (see XV.B.5.1.) is usually disseminated by one or a group of marketing authorisation holders for the respective medicinal product(s) or active substance(s), either at the request of a national medicines authority, or on the marketing authorisation holder's own initiative. The marketing authorisation holder should seek the agreement of the relevant national medicines authorities regarding the content of a DHPC (and communication plan) prior to dissemination.

XV.C.2.1. Processing of DHPCs

The situations when a DHPC is necessary or should be considered are provided in XV.B.5.1. When drafting a DHPC, the template (see Annex II) and the guidance provided in the annotations in the template should be followed as appropriate.

The marketing authorisation holder should submit the following to the medicines authority (s) in the Arab Country (s) where the products are authorised:

- draft DHPC; and

- **the dissemination list** also known as "intended recipient list": the intended recipients HCPs groups may be general practitioners, specialists, pharmacists, nurses; hospitals/ambulatory care/other institutions as appropriate. The list should specify the intended recipients name, specialty and geographical distribution;
  When defining the target groups of recipients, it should be recognized that it is not only important to communicate with those HCPs who will be able or likely to prescribe or administer the medicinal product, but also to those who may diagnose adverse reactions, e.g. emergency units, poison centres, or to appropriate specialists, e.g. cardiologists. It is also important to consider provision of DHPCs to relevant pharmacists (hospital and /or community) who serve as information providers within healthcare systems and provide assistance and information to Patients, HCPs, including hospital wards and poison centres, as well as the general public.
- **timetable for disseminating** the DHPC: the proposed timetable should be appropriate according to the urgency of the safety concern (usually maximum of 15 calendar days is considered appropriate);
- **dissemination mechanism**: how the DHPC is planned to be disseminated, the proposed mechanism should be selected appropriately to meet the dissemination timetable.
- The last 3 items above are known as the communication plan.

The marketing authorisation holder should submit these documents in the form of one full original hard copy and one soft copy, after approval by the national medicines authority; the MAH will receive back the hard copy stamped with "approved", while the soft copy will be retained at the authority. These submission requirements may differ in some Arab Countries; consult with the national medicines authority.

The marketing authorisation holder should allow a minimum of two working days for comments. However, whenever possible more time should be allowed. The timing may be adapted according to the urgency of the situation.

The national medicines authority will review the DHPCs (may request advice from its scientific committees/ pharmacovigilance committee as appropriate.

Once the content of a DHPC and communication plan from the MAH are agreed by national medicines authorities, the MAH can start dissemination of the agreed DHPC (i.e. the MAH shall NOT start disseminating the DHPC prior to obtaining the approval from the national medicines authority).

The MAH should adhere to the Communication Plan agreed with the national medicines authority. Any significant event or problem occurring during the DHPC dissemination which reveals a need to change the Communication Plan or a need for further communication to Healthcare Professionals, this should be notified in a timely manner to national medicines authority to be approved.

After dissemination of a DHPC, a closing review should be performed by the MAH, a progress report may be submitted upon request of the national medicines authority.

In cases where a medicines authority in other country (Arab or non-Arab) requests the

dissemination of a DHPC in its territory, the marketing authorisation holder should notify the relevant national medicines authorities of the Arab Country(s) in which this product is also authorized. This is in the context of the national legal requirement under which the marketing authorisation holder shall notify the national medicines authorities of any new information which may impact the benefit-risk balance of a medicinal product. The need for any subsequent communication, e.g. a DHPC, in the Arab Country(s) concerned should be considered and agreed on a case-by- case basis.

A flow chart describing the processing of DHPCs is provided in Figure XV.I at the end of the Module.

XV.C.2.2. Translation of DHPCs

The usual language for preparing the DHPCs will be English (unless other language is requested by the medicines authority in the Arab Country concerned e.g. Arabic or French).An Arabic translation of the DHPCs may be required if this is suitable to (part of) the intended receipts (e.g. nurses). Consult with the national medicines authority for national requirements.

XV.C.2.3. Publication of DHPCs

The national medicines authorities may publish the final DHPC on their official websites. In each Arab country concerned, the timing for such publication should be aligned to that of the dissemination of DHPC in the same Arab country. The national medicines authorities may also issue an additional safety announcement, and disseminate the DHPC to relevant healthcare professionals' organisations as appropriate.

Figure VX.1: Flow chart for the processing of Direct Healthcare Professional Communications (DHPCs) in the Arab Country concerned

NMA: national medicines authority
MAH: Marketing authorization holder

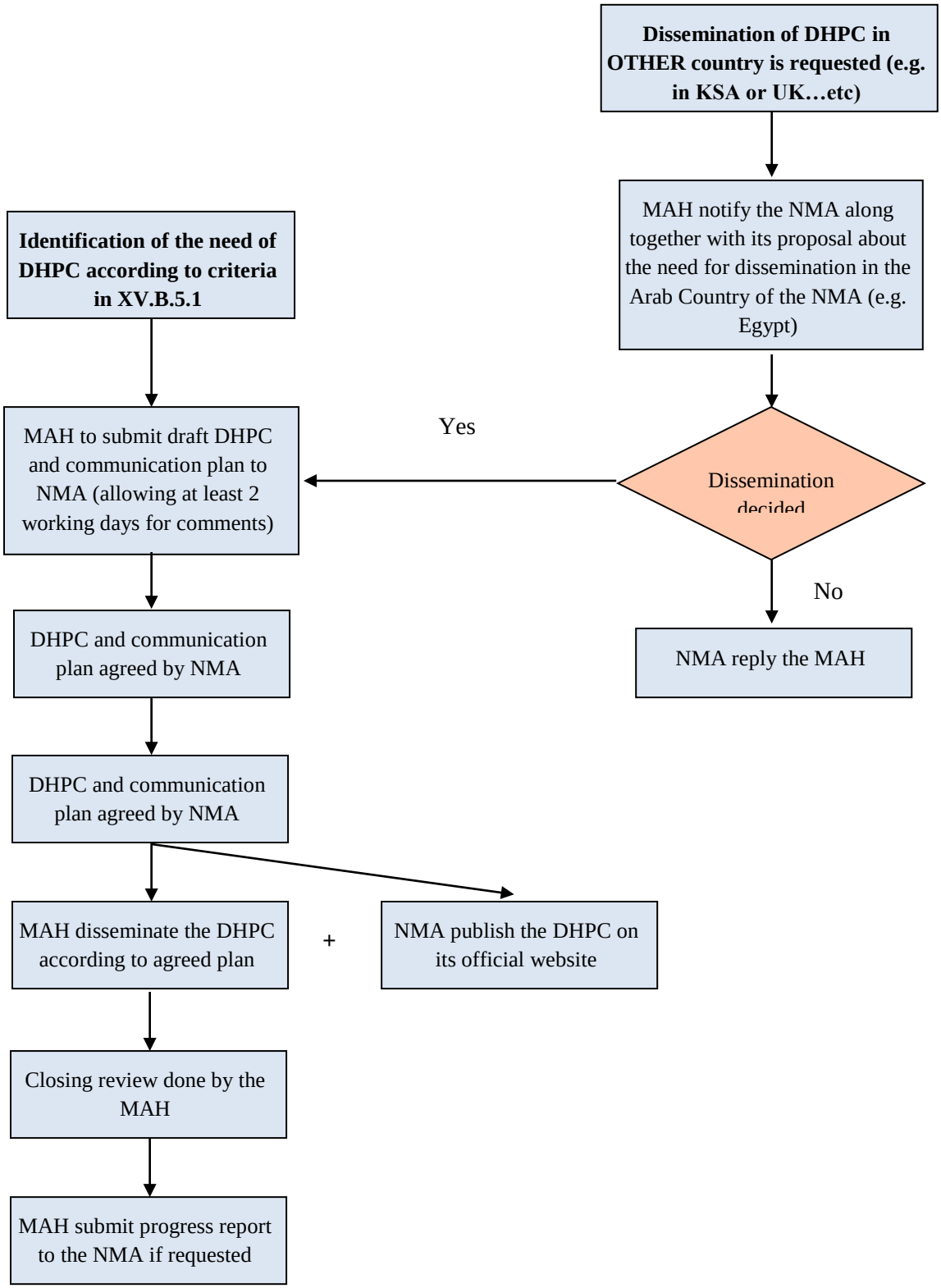

Guideline on good pharmacovigilance practices (GVP)
For Arab Countries

GVP: Modules

Module XVI – Risk minimization measures: selection of tools and effectiveness indicators

XVI.A. Introduction

Risk minimisation measures are interventions intended to prevent or reduce the occurrence of adverse reactions associated with the exposure to a medicine, or to reduce their severity or impact on the patient should adverse reactions occur. Planning and implementing risk minimisation measures and assessing their effectiveness are key elements of risk management.

The guidance provided in this Module should be considered in the context of the wider GVP guidance, in particular in conjunction with Module V.

Risk minimisation measures may consist of routine risk minimisation or additional risk minimisation measures. Routine risk minimisation is applicable to all medicinal products, and involves the use of the following tools, which are described in detail in Module V:

- the summary of product characteristics (SmPC);
- the package leaflet;
- the labelling;
- the pack size and design;
- the legal (prescription) status of the product.

Safety concerns of a medicinal product are normally adequately addressed by routine risk minimisation measures (see Module V). In exceptional cases however, routine risk minimisation measures will not be sufficient for some risks and additional risk minimisation measures will be necessary to manage the risk and/or improve the risk-benefit balance of a medicinal product. This module provides particular guidance on the use of additional risk minimisation measures, including the selection of tools and the evaluation of their effectiveness. In specific circumstances, however, the effectiveness evaluation may also apply to routine risk minimisation measures associated with safety concern(s) which are described in the SmPC/PIL (e.g. the SmPC provides guidance for clinical actions beyond routine standards of clinical care for either the risk itself or management of the target population).

On the basis of the safety concerns described in the safety specification (see GVP Module V), the appropriate risk minimisation measures should be determined. Each safety concern needs to be individually considered and the selection of the most suitable risk minimisation measure should take into account the seriousness of the potential adverse reaction(s) and its severity (impact on patient), its preventability or the clinical actions required to mitigate the risk, the indication, the route of administration, the target population and the healthcare setting for the use of the product. A safety concern may be addressed using more than one risk minimisation measure, and a risk minimisation measure may address more than one safety concern.

The marketing authorisation holder shall include all risk minimisation measures in the risk management plan and monitor their outcome .

This Module provides guidance on the principles for:

- The development and implementation of additional risk minimisation measures, including

examples of risk minimisation tools;

- The evaluation of the effectiveness of risk minimisation measures.

Part XVI.B. describes the development, implementation and co-ordination of risk minimisation measures and the general principles of the evaluation of their effectiveness. Part XVI.C. considers the application of those measures and principles in the setting of the national regulations in the Arab Countries.

In this Module, all applicable legal requirements are usually identifiable by the modal verb “shall”. Guidance for the implementation of legal requirements is provided using the modal verb “should”.

XVI.B. Structures and processes

XVI.B.1. General principles

Risk minimisation measures aim to optimise the safe and effective use of a medicinal product throughout its life cycle. The risk-benefit balance of a medicinal product can be improved by reducing the burden of adverse reactions or by optimising benefit, through targeted patient selection and/or exclusion and through treatment management (e.g. specific dosing regimen, relevant testing, patient follow-up). Risk minimisation measures should therefore guide optimal use of a medicinal product in medical practice with the goal of supporting the provision of the right medicine, at the right dose, at the right time, to the right patient and with the right information and monitoring.

The majority of safety concerns are addressed by routine risk minimisation measures (see Module V). Exceptionally, for selected important risks, routine risk minimisation may be considered insufficient and additional risk minimisation measures may be deemed to be necessary. In determining if additional risk minimisation activities are needed, safety concerns should be prioritised in terms of frequency, seriousness, severity, impact on public health and preventability. Careful consideration should then be given to whether the goal can be reached with routine minimisation activities, and, if not considered feasible, which additional minimisation measure(s) is (are) the most appropriate. Additional risk minimisation measures should focus on the most important, preventable risks and the burden of imposing additional risk minimisation should be balanced with the benefit for patients.

A variety of tools are currently available for additional risk minimisation. This field is continuously developing, and new tools are likely to be developed in the future. Technology advances, such as interactive web-based tools may gain prominence in the future in addition to the paper-based educational materials.

Successful implementation of additional risk minimisation measures requires contributions from all impacted stakeholders, including marketing authorisation applicants or holders, patients and healthcare professionals. The performance of these measures in healthcare systems requires assessment to ensure that their objectives are fulfilled and that the measures in place are proportionate taking account of the risk-benefit balance of the product and the efforts required of healthcare professionals and patients to implement the measures. It is therefore important to ensure that additional risk minimisation measures, including assessment of their effectiveness, do not

introduce undue burden on the healthcare delivery system, the marketing authorisation holders, the regulators, and, most importantly, on the patients. To this aim, they should have a clearly defined objective relevant to the minimisation of specific risks and/or optimisation of the risk-benefit balance. Clear objectives and defined measures of success with milestones need to guide the development of additional risk minimisation measures and close monitoring of both their implementation and ultimate effectiveness is necessary. The nature of the safety concern in the context of the risk-benefit balance of the product, the therapeutic need for the product, the target population and the required clinical actions for risk minimisation are factors to be considered when selecting risk minimisation tools and an implementation strategy to accomplish the desired public health outcome. The evaluation of effectiveness should facilitate early corrective actions if needed and may require modification over time. It is recognised that this is an evolving area of medical sciences with no universally agreed standards and approaches. Therefore, it is important to take advantage of any relevant elements of methodology from pharmacoepidemiology and other disciplines, such as social/behavioural sciences and qualitative research methods.

The introduction of additional risk minimisation should be considered as a "programme" where specific tools, together with an implementation scheme and evaluation strategy are developed. The description of risk minimisation measures, an integral part of the RMP (see Module V), should therefore give appropriate consideration to the following points:

- **Rationale**: When additional risk minimisation measure(s) are introduced a rationale should be provided for those additional measures;
- **Objectives**: Each proposed additional risk minimisation measure(s) should include defined objective(s) and a clear description of how and which safety concern is addressed with the proposed additional risk minimisation measure(s);
- **Description**: This section of the RMP should describe the selected additional risk minimisation measures, including tools that will be used and key elements of content;
- **Implementation**: This section of the RMP should provide a detailed proposal for the implementation of additional risk minimisation measures (e.g. setting and timing or frequency of intervention, details of the target audience, plan for the distribution of educational tools; how the action will be coordinated where more than one marketing authorisation holder is involved);
- **Evaluation**: This section of the RMP should provide a detailed plan with milestones for evaluating the effectiveness of additional risk minimisation measures in process terms and in terms of overall health outcome measures (e.g. reduction of risk).

XVI.B.2.Risk minimisation measures

Risk minimisation measures aim to facilitate informed decision making to support risk minimisation when prescribing, supplying and/or using a medicinal product. While routine measures are applied to every medicinal product (see details in Module V) additional risk minimisation activities should only be introduced when they are deemed to be essential for the safe and effective use of the medicinal product (see also XVI.C.1.) and should be developed and provided by suitably qualified people.

Additional risk minimisation measures may differ widely in purpose, design, target audience and

complexity. These measures might be used to guide appropriate patient selection with the exclusion of patients where use is contraindicated, to support on-treatment monitoring relevant to important risks and/or management of an adverse reaction once detected. Additionally, specific measures may be developed to minimise the risk of medication error and/or to ensure appropriate administration of the product where it is not feasible to achieve this through the product information and labelling alone.

Section XVI.B.2. describes additional risk minimisation measures that may be considered in addition to the routine measures, including:

- Educational programmes;
- Controlled access programmes;
- Other risk minimisation measures.

XVI.B.2.1. Educational programme

Educational programmes are based on targeted communication with the aim to supplement the information in the summary product characteristics (SmPC) and package leaflet. Any educational material should focus on actionable goals and should provide clear and concise messages describing actions to be taken in order to prevent and minimised selected safety concerns.

The aim of an educational programme is to improve the use of a medicine by positively influencing the actions of healthcare professionals and patients towards minimising risk. Educational materials should therefore be built on the premise that there is an actionable recommendation for targeted education and that applying this measure is considered essential for minimising an important risk and/or for optimisation of the risk-benefit balance. In the context of an educational programme, the tools can have several different target audiences, can address more than one safety concern and can be delivered using a combination of tools and media (e.g. paper, audio, video, web, in-person training). Ideally, educational materials should be available in a range of formats so as to ensure that access is not limited by disability or access to the internet. When feasible the appropriateness of the tool and media for the target audience (e.g. suitable language, pictures, diagrammes, or other graphical support) should be user tested in advance, in order to optimise the success of the implementation phase.

The content of any educational material should be fully aligned with the currently approved product information for a medicinal product, such as the SmPC and package leaflet, and should add rather than duplicate SmPC and package leaflet information. Promotional elements, either direct or veiled (e.g. logos, product brand colours, suggestive images and pictures), should not be included and the focus of the educational material should be on the risk(s) related to the product and the management of those risk(s) requiring additional risk minimisation.

Any educational programme should be completely separated from promotional activities and contact information of physicians or patients gathered through educational programmes should not be used for promotional activities.

The educational tools described below can be considered individually or in combinations while developing an educational programme for the purpose of additional risk minimisation.

XVI.B.2.1.1. Educational tools

An educational tool should have a clearly defined scope and should include unambiguous statement(s) regarding the important risk(s) of concern to be addressed with the proposed tool, the nature of such risk(s) and the specific steps to be taken by healthcare professionals and/or patients in order to minimise those risks. This information should focus on clearly defined actions related to specific safety concerns described in the RMP and should not be unnecessarily diluted by including information that is not immediately relevant to the safety concern and that is adequately presented in the SmPC or package leaflet. Educational tools should refer the reader to the SmPC and the package leaflet. In addition to an introductory statement that the educational material is essential to ensure the safe and effective use and appropriately manage important selected risks, elements for inclusion in an educational tool could provide:

- guidance on prescribing, including patient selection, testing and monitoring;
- guidance on the management of such risks (to healthcare professionals and patients or carers);
- guidance on how and where to report adverse reaction of special interest.

Further guidance on the responsibilities of the applicant or marketing authorisation holder and the national medicines authorities are provided in XVI.C.1. of this Module.

XVI.B.2.1.1.1 Educational tools targeting healthcare professionals

The aim of any educational tool targeting a healthcare professional should be to deliver specific recommendation(s) on the use (what to do) and/or contraindication(s) (what not to do) and/or warnings (how to manage adverse reactions) associated with the medicine and the specific important risks needing additional risk minimisation measures, including:

- selection of patients;
- treatment management such as dosage, testing and monitoring;
- special administration procedures, or the dispensing of a medicinal product;
- details of information which needs to be given to patients.

The format of a particular tool will depend upon the message to be delivered. For example, where a number of actions are needed before writing a prescription for an individual patient, a checklist may be the most suitable format. A brochure may be more appropriate to enhance awareness of specific important risks with a focus on the early recognition and management of adverse reactions, while posters for display in certain clinical environments can include helpful treatment or dosage reference guides. Other formats may be preferable, depending on the scope of the tool.

XVI.B.2.1.1.2. Educational tools targeting patients and/or carers

The aim of tools targeting patients should be to enhance the awareness of patients or their carers on the early signs and symptoms of specific adverse reactions causing the need for additional risk minimisation measures and on the best course of action to be taken should any of those symptoms occur. If appropriate, a patient's educational tool could be used to provide information on the correct administration of the product and to remind the patient about an important activity, for

example a diary for posology or diagnostic procedures that need to be carried out and recorded by the patient and eventually discussed with healthcare professionals, to ensure that any steps required for the effective use of the product are adhered to.

Patient alert card

The aim of this tool should be to ensure that special information regarding the patient's current therapy and its important risks (e.g. potential life-threatening interactions with other therapies) is held by the patient at all times and reaches the relevant healthcare professional as appropriate. The information should be kept to the minimum necessary to convey the key minimisation message(s) and the required mitigating action, in any circumstances, including emergency. Ability to carry with ease (e.g. can be fitted in a wallet) should be a key feature of this tool.

XVI.B.2.2 Controlled access programme

A controlled access programme consists of interventions seeking to control access to a medicinal product beyond the level of control ensured by routine risk minimisation measures i.e. legal status. Since a controlled access programme has large implications for all stakeholders, the use of such a programme should be limited and should be guided by a clear therapeutic need for the product based on its demonstrated benefit (e.g. it treats a serious disease without alternative therapies; it treats patients who have failed on existing therapies), the nature of the associated risk (e.g. risk is life-threatening), and whether this risk is expected to be managed by the interventions. Therefore, controlled access should only be considered as a tool for minimising an important risk with significant public health or individual patient impact for a product with clearly demonstrated benefits but which would not otherwise be available without a programme where patient access is contingent on fulfilling one or more requirements prior to a product being prescribed or dispensed in order to assure its safe use.

Examples of requirements that need to be fulfilled before the product is prescribed and/or dispensed and/or used in a controlled access programme are listed below (they may be included individually or in combination):

- Specific testing and/or examination of the patient to ensure compliance with strictly defined clinical criteria;
- Prescriber, dispenser and/or patient documenting their receipt and understanding of information on the serious risk of the product;
- Explicit procedures for systematic patient follow-up through enrolment in a specific data collection system e.g. patient registry;
- Medicines made available for dispensing only to Pharmacies which are registered and approved to dispense the product.

On occasions, a requirement to test or to monitor a patient in a specific way can also be used as a controlled access tool. For example, monitoring of the patient's health status, laboratory values or other characteristic (e.g. an ECG) prior to and/or during treatment, e.g. liver function tests, regular blood tests, pregnancy test (which can be part of a pregnancy prevention programme). Measures should be put in place to ensure that monitoring takes place according to the SmPC where this is

critical to risk-benefit balance of the product.

XVI.B.2.3. Other risk minimisation measures

XVI.B.2.3.1 Controlled distribution systems

A controlled distribution system refers to the set of measures implemented to ensure that the stages of the distribution chain of a medicinal product are tracked up to the prescription and/or pharmacy dispensing the product. Orders and shipments of product from a single or multiple identified distribution points in the Arab Country concerned facilitate traceability of the product. For instance, this sort of measures could be considered for those products controlled in each Arab Country under the respective national legislations about the misuse and abuse of medicines.

XVI.B.2.3.2 Pregnancy prevention programme

A pregnancy prevention programme (PPP) is a set of interventions aiming to minimise pregnancy exposure during treatment with a medicinal product with known or potential teratogenic effects. The scope of such a programme is to ensure that female patients are not pregnant when starting therapy or do not become pregnant during the course and/or soon after stopping the therapy. It could also target male patients when use of a medicinal product by the biological father might have a negative effect on pregnancy outcome.

A PPP combines the use of educational tools with interventions to control appropriately access to the medicine. Therefore, the following elements should be considered individually and/or in combination in the development of a PPP:

- Educational tools targeting healthcare professionals and patients to inform on the teratogenic risk and required actions to minimise this risk e.g. guidance on the need to use more than one method of contraception and guidance on different types of contraceptives; information included for the patient on how long to avoid pregnancy after treatment is stopped; information for when the male partner is treated;
- Controlled access at prescribing or dispensing level to ensure that a pregnancy test is carried out and negative results are verified by the healthcare professional before prescription or dispensing of the medicinal product (and);
- Prescription limited to a maximum of 30 days supply;
- Counselling in the event of inadvertent pregnancy and evaluation of the outcome of any accidental pregnancy.

The design and implementation of a pregnancy registry (as a stand-alone activity or as part of a pregnancy prevention programme) should also be considered for universal enrolment of patients who become pregnant during treatment or within an appropriate time from the end of treatment e.g. 3 months. Use of this systematic tool to collect pregnancy outcome information can be helpful in assessing the effectiveness of the pregnancy prevention programme and/or in facilitating further characterisation of the risk, particularly in the early period post authorisation when human pregnancy data may be very limited and/or when the potential concern may be based on non-clinical data alone.

XVI.B.2.3.3 Direct health care professional communication (DHPC)

A direct healthcare professional communication (DHPC) is a communication intervention by which important information is delivered directly to individual healthcare professionals by a marketing authorisation holder or by a medicines authority, to inform them of the need to take certain actions or adapt their practices in relation to a medicinal product (see Annex I). For example, a DHPC may aim at adapting prescribing behaviour to minimise particular risks and/or to reduce the burden of adverse reactions with a medicinal product. Situations where dissemination of a DHPC should be considered are detailed in Module XV.

XVI.B.3. Implementation of risk minimisation measures

Additional risk minimisation measures can consist of one or more interventions that should be implemented in a sustainable way in a defined target group. Careful consideration should be given to both the timing and frequency of any intervention and the procedures to reach the target population. For example, a one-off distribution of educational tools may be insufficient to ensure that all potential prescribers and/or users, including new prescribers and users, are reached. Additional periodic redistribution of the tools might be necessary. Conversely, educational materials required at the time of launch of a new medicinal product may no longer be necessary or relevant once it has been available for a number of years. Because risk minimisation measures serve different purposes, some measures such as alert cards, controlled access programmes and pregnancy prevention programmes, will usually apply to all future applications for the same medicinal product, whilst others, such as DHPCs and training materials, may not necessarily be needed for all future applications. The appropriateness of each measure and whether these will be required for the future applications for the same medicinal products should be carefully considered at the time of authorisation of the product (and made clear in the RMP). Careful consideration should be given to the layout and content of the educational tools to ensure a clear distinction from any promotional material distributed. Submission of educational material for review by the national medicines authority should be separate from submission of promotional material and a covering letter should clearly state whether the materials are promotional or educational. Furthermore, educational tools should be distributed separately from promotional materials as a ‘stand-alone’ communication and it should be clearly stated that the tools are not promotional material, but rather have risk minimisation purposes. Quality assurance mechanisms should ensure that the distribution systems in place are fit for purpose and auditable.

XVI.B.4. Effectiveness of risk minimisation measures

Evaluating the effectiveness of additional risk minimisation measures is necessary to establish whether an intervention has been effective or not, and if not why not and which corrective actions are necessary. The evaluation should be performed for the additional risk minimisation tools individually and for the risk minimisation programme as a whole.

Effectiveness evaluation should be conducted at the most appropriate time, accounting for time required for launch of interventions, estimated use of the product into the healthcare system and other relevant circumstances.

Periodic review of the effectiveness of one or more specific tools or the overall programme, as appropriate should be also planned. Time points of particular relevance are as follows:

- after initial implementation of a risk minimisation programme (e.g. within 12-18 months), in order to allow the possibility of amendments, should they be necessary;
- in time for the evaluation of the renewal of a marketing authorisation; and

whenever effectiveness is evaluated, careful consideration should be given on the need for continuing with the additional risk minimisation measure.

Effectiveness evaluation should address different aspects of the risk minimisation, the process itself (i.e. to what extent the programme has been implemented as planned), its impact on knowledge and behavioral changes in the target audience (i.e. the measure(s) in affecting behavioural change), and the outcome (i.e. to what extent the predefined objectives of risk minimisation were met, in the short and long term). In designing an evaluation strategy, due consideration needs to be made toward what aspects of process and outcomes can be realistically measured in order to avoid the generation of inaccurate or misleading data or placing an undue burden on the healthcare system or other stakeholders. The time of assessing each aspect of the intervention as well as setting of realistic metrics on which the effectiveness of the tool is judged, should also be carefully considered and planned prior to initiation.

To evaluate the effectiveness of additional risk minimisation measures two categories of indicators should be considered:

- Process indicators;
- Outcome indicators.

Process indicators are necessary to gather evidence that the implementing steps of additional risk minimisation measures have been successful. These process indicators should provide insight into what extent the programme has been executed as planned and whether the intended impacts on behaviour have been observed. Implementation metrics should be identified in advance and tracked over time. The knowledge gained may be used to support corrective implementation action as needed. Assessing the implementation process can also improve understanding of the process(es) and causal mechanism(s) whereby the additional risk minimisation measure(s) did or did not lead, to the desired control of specified important risks.

Outcome indicators provide an overall measure of the level of risk control that has been achieved with any risk minimisation measure in place. For example, where the objective of an intervention is to reduce the frequency and/or severity of an adverse reaction, the ultimate measure of success will be linked to this objective.

In rare circumstances when it is fully justified that the assessment of outcomes indicators is unfeasible (e.g. inadequate number of exposed patients, very rare adverse events), the effectiveness evaluation may be based exclusively on the carefull interpretation of data on process indicators.

The conclusion of the evaluation may be that risk minimisation should remain unchanged or modifications are to be made to existing activities. Alternatively, the assessment could indicate that risk minimisation is insufficient and should be strengthened (e.g. through amendment of warnings or recommendations in the SmPC or package leaflet, improving the clarity of the risk minimisation

advice and/or by adding additional tools or improving existing tools). Another decision may be that the risk minimisation is disproportionate or lacking a clear focus and could be reduced or simplified (e.g. by decreasing the number of tools or frequency of intervention, or by eliminating interventions proved to be non-contributory to risk minimisation). In all circumstances, the burden on the patient and the healthcare system should be given careful consideration.

In addition to assessing the effectiveness of risk minimisation measures in managing safety concerns, it is also important to monitor if the risk minimisation intervention may have had unintended (negative) consequences relevant to the public health question under consideration, either in the short and/or long term. Examples of unintended consequences may include undue burden on the healthcare system, or discontinuation of a product even if its risk-benefit balance remains positive.

This guidance defines "Any study ….measuring the effectiveness of risk management measures" as a post-authorisation safety study. Therefore, if a study is conducted to assess behavioural or safety outcome indicators the detailed guidance for conducting a post-authorisation safety study, which is provided in Module VIII, should be followed. Such guidance does not apply to the measurement of simple process markers (e.g. distribution of the tools reaching the target population). The ENCePP Guide on Methodological Standards in Pharmacoepidemiology[53] (which is acknowledged in the Arab Countries) should be considered as appropriate.

XVI.B.4.1. Process indicators

Process indicators are measures of the extent of implementation of the original plan, and/or variations in its delivery. Process indicators should complement but not replace the assessment of the attainment of the objectives of the risk minimisation measures (i.e. outcome indicators). Depending on the nature of the interventions various process indicators can be identified for the assessment of their performance.

XVI.B.4.1.1 Reaching the target population

When risk minimisation measures involve the provision of information and guidance to healthcare professionals and/or patients by mean of educational tools, measures of distribution should be used to acquire basic information on implementation. These metrics should focus on assessing whether the materials were delivered to the target audience and whether they were actually received by the target population.

XVI.B.4.1.2 Assessing clinical knowledge

In order to assess the awareness of the target audience and the level of knowledge achieved by educational interventions and/or information provision (for example via an educational programme with a goal of preventing drug exposure during pregnancy), scientifically rigorous survey methods should be applied. Appendix I summarises key methodological aspects to be considered for the design and implementation of a survey.

[53] http://www.encepp.eu

A survey generally includes a core of standard questions administered through telephone contact, in person interview, or self-administered through postal/electronic communication, which are repeated over time. Such an approach may be tailored to the monitoring of attitude and knowledge in a diverse sample, that includes representatives from each segment of interest in the target populations of healthcare professionals and/or patients. Psychometric measures should be used as appropriate. Whenever feasible a randomised sample and an adequate sample size should be selected. In contrast, use of advocacy groups or patient support groups to survey knowledge can be considered to be inherently biased through self-selection, and should be avoided.

Appropriate attention should be given to the research objectives, study design, sample size and representativeness, operational definition of dependent and independent variables, and statistical analysis. Thorough consideration should also be given to the choice of the most appropriate data collection instruments (e.g. questionnaires).

XVI.B.4.1.3 Assessing clinical actions

In order to evaluate the effectiveness of educational interventions and/or information provisions, not only clinical knowledge but also the resulting clinical actions (i.e. prescribing behaviour) should be measured. Drug utilisation studies by means of secondary use of electronic records or through medical chart abstraction are valuable options to quantify clinical actions, if representative of the target population and where adequate databases are accessible. The analysis of prescription records, especially when linked to other records of patients (e.g. clinical and demographic data), may allow the evaluation of prescribing behaviour, including co-prescribing of two interacting medicinal products, compliance with laboratory monitoring recommendations, as well as patient selection and monitoring. By applying appropriate statistical methods (e.g. time series analyses, survival analyses, logistic regression) to a cohort of medicines users, different aspects of prescribing or use may be assessed, which can provide insights beyond purely descriptive evidence. Careful consideration should be given to the conduct and interpretation of drug utilisation studies in different countriesincluding the legal status of the medicine and how it is prescribed and dispensed, since prescription patterns may reflect not only the product information and any risk minimisation intervention, but also national guidelines, aspects related to healthcare services, local medical practice, and reimbursement constraints. Such a diversity of national healthcare delivery systems across different countriesmay justify the conduct of a study with the same objectives in multiple countries.

The study of behaviour based on data collected through surveys should only be considered when no pre-existing data are available to evaluate clinical actions (i.e. conduct a drug utilisation study based on self-reported data collected in healthcare professionals and/or patients survey).

XVI.B.4.2. Outcome indicators

The ultimate measures of success of a risk minimisation programme are the safety outcomes, i.e. the frequency and/or severity of adverse reactions in relation to patients' exposure to the medicine outside of an interventional study setting (i.e. non-interventional setting) and those safety outcomes should be the outcome indicator(s). Such an evaluation should involve the comparison of epidemiologic measures of outcome frequency such as incidence rate or cumulative incidence of an

adverse reaction, obtained for example in the context of post-authorisation safety studies. The use of appropriate safety-related outcomes of interest should be considered (e.g. a surrogate endpoint such as an adequate biomarker as a substitute for a clinical endpoint) if such an approach facilitates the effectiveness evaluation. Under any approach, scientific rigour and recognised principles of epidemiologic research should always guide the assessment of the final outcome indicator of interest. Comparisons of frequency before and after the implementation of the risk minimisation measures (i.e. pre-post design) should be considered. When a pre-post design is unfeasible (e.g. risk minimisation measures are put in place at the time of initial marketing authorisation), the comparison of an outcome frequency indicator obtained post-intervention against a predefined reference value obtained from literature review, historical data, expected frequency in general population, would be acceptable (i.e. observed versus expected analysis) and should take into account any stimulated reporting, changes in patient care and/or risk minimisation measures over time. The selection of any particular reference group should be appropriately justified.

Methods to measure the effectiveness of risk minimisation measure should be proportionate to the risks being minimised. As such use of spontaneous reporting rates (i.e. number of suspected adverse reaction reports over a fixed time period) may be acceptable in the context of routine risk minimisation. Spontaneous reporting should be considered with caution when estimating the frequency of adverse events in the treated population, but it may be used in very specific circumstances, for instance when the adverse reaction with the product is rare and there is a negligible background incidence of the adverse event in the general population and a strong association between treatment and the adverse event. In those circumstances when a direct measure on the risk in the treated population is not feasible, spontaneous reporting could offer an approximation of the frequency of the adverse reaction in the treated population, provided that reasonably valid data can be obtained to evaluate the reporting rate in the context of product use. However, the well know biases that affects reporting of suspected adverse reactions may provide misleading results. For instance, the introduction of a risk minimisation measure in response to a safety concern detected in the post-authorisation phase of a medicinal product may raise awareness regarding selected adverse reactions which ultimately may result in an increased reporting rate. In these circumstances an analysis of spontaneous reporting may lead to the erroneous conclusion that the intervention was ineffective. Decreasing reporting rates over time may also lead to the erroneous conclusion that the intervention was effective.

XVI.B.5. Coordination

If several products, referred to as “generics” of the same active substance are available in a market there should be a consistent approach in the use of additional risk minimisation measures coordinated and overseen by the national medicines authorities. When a coordinated action for a class of products is needed a harmonised approach should be agreed if appropriate. Under these circumstances advanced planning should ensure that the effectiveness of risk minimisation measures (see XVI.B.4.) can be considered for each individual product as well as for the products collectively.

XVI.B.6. Quality systems of risk minimisation measures

Although many experts may be involved in developing and implementing risk minimisation measures, the final responsibility for the quality, accuracy and scientific integrity of those measures and the plan describing them lies with the marketing authorisation holder and its qualified person responsible for pharmacovigilance (QPPV)/local safety responsible (LSR) in the Arab Country concerned.

The marketing authorisation holder is responsible for updating the RMP when new information becomes available and should apply the quality principles detailed in Module I. Tracked versions of the RMP should be submitted to facilitate regulatory assessment. These records, the RMP and the associated risk management systems, as well as any documents on risk minimisation measures may be subject to audit or inspection.

The marketing authorisation holder should ensure appropriate version control of the risk minimisation tools in order to ensure that all healthcare professionals and patients receive up-to--date risk minimisation tools in a timely manner and that the tools in circulation are consistent with the approved product information. To this purpose the marketing authorisation holders are encouraged to keep track of the receipt of any risk minimisation tools. These records may be subject to audit and inspection.

The marketing authorisation holder should ensure that mechanisms for reporting the results of studies or analyses for evaluation of the effectiveness of risk minimisation measures are documented. These may be subject to audit or inspection.

XVI.C. Operation of the Risk minimisation measures in the Arab Countries

XVI.C.1. Roles and responsibilities in the Arab Country concerned for implementing additional risk minimisation measures

Implementation of additional risk minimisation measures shall take place at national level. Taking into consideration the diversity of healthcare systems in different countries; this allows the national medicines authorities to tailor the required conditions and restrictions to any national legal requirements and local healthcare systems.

. In circumstances where some additional risk minimisation measures are specific for only some Arab Countries (e.g. an activity is specifically linked to the healthcare system of one Arab Country)these shall be included in the RMP. Further details or key elements on any additional risk minimisation measures may be included in annex 10 of the RMP (see Module V).

XVI.C.1.1. Roles and responsibilities of the national medicines authorities

The national medicines authorities are responsible for the oversight at national level of the implementation of all additional risk minimisation measures for the safe and effective use of a

medicinal product in the Arab Country concerned.

For those risk minimisation measures introduced after the initial marketing authorisation, the national medicines authorities should ensure prompt consideration and agreement of the interventions with the marketing authorisation holder.

The national medicines authorities may facilitate harmonization of the implementation of risk minimisation tools for generic products of the same active substance. When additional risk minimisation measures are considered necessary for generic medicinal product(s) based on safety concerns related to the active substance, the risk minimisation measures applicable to the generic product(s) should be aligned with those for the reference medicinal product. Additional risk minimisation measures[)] may be required in some circumstances beyond those of the reference medicinal product (e.g. different formulation or route of administration or incompatibility issues). To facilitate this, the national medicines authority/ National Pharmacovigilance Advisory committee may give advice on the key elements that should be implemented for all concerned authorised products and on agreement, may make these general requirements publicly available to facilitate harmonised implementation at national level.

Additionally, the national medicines authorities should agree the final content, format and media of the risk minimisation tools, including printed material, web-based platforms and other audio-video media, as well as the schedule planning of interventions with the applicant or marketing authorisation holder before a product is introduced to their market or at any time thereafter as needed.

The national medicines authority is autonomous in deciding appropriate national educational materials and/or other risk minimisation tools. Similarly, measurement of effectiveness of additional risk minimisation measures may be required in one Arab Country in reason of its specific healthcare delivery setting or when, due to national specificities, results of the effectiveness studies cannot be extrapolated from studies conducted in other countries.

In addition to advising on the studies and measures described in the RMP, the national medicines authority may assess both protocol and results of imposed post-authorisation safety studies which aim to evaluate the effectiveness of risk minimisation measures (see Module VIII).

National medicines authorities shall monitor at national level the outcome of all risk minimisation measures. Hence, take as appropriate any necessary regulatory action.

XVI.C.1.2. Marketing authorisation applicant or holder

The applicant or marketing authorisation holder should clearly define the objectives of any proposed additional risk minimisation measure and the indicators to assess their effectiveness. Any additional risk minimisation intervention should be developed in accordance with the general principles outlined in XVI.B.1. and XVI.B.2. and should be fully documented in the RMP (see Module V).

The measures adopted in the RMP should be implemented at national level after agreement with the national medicines authorities.

The applicant or marketing authorisation holder should provide information regarding the status of

implementation of additional risk minimisation measures as agreed with the national medicines authorities and keep them informed of any changes, challenges or issues encountered in the implementation of the additional risk minimisation measures. Any relevant changes to the implementation of the tools should be agreed with the national medicines authorities before implementation.

In the implementation of web-based tools the applicant or marketing authorisation holder should apply requirements specific for each Arab country, with particular consideration of potential issues linked to accessibility, recognisability, responsibility, and privacy and data protection.

For generic products the applicant or marketing authorisation holder should develop risk minimisation in line with the scope, content, and format of the tools used for the reference medicinal product. Scheduling and planning of interventions should be carefully coordinated in order to minimise the burden on the healthcare systems.

For generic products, the effectiveness of risk minimisation measures should be assessed by the marketing authorisation holders in close co-operation with the national medicines authorities. Where formal studies are justified, joint studies for all medicinal products involved are strongly encouraged in order to minimise the burden on the healthcare systems. For instance, if a prospective cohort study is instituted, study entry should be independent from the prescription of a product with a specific invented name or marketing authorisation holder. Recording of specific product details would still be important to enable rapid identification of any new safety hazard with a particular product.

The marketing authorisation holder shall monitor the outcome of all risk minimisation measures . General principles for effectiveness evaluation are provided in XVI.B.3..

The applicant or marketing authorisation holder should report the evaluation of the impact of additional risk minimisation activities when updating the RMP (see V.B.11.4.).

The applicant or marketing authorisation holder should report in the Periodic Safety Update Report (PSUR) the results of the assessment of the effectiveness of risk minimisation measures which might have an impact on the safety or risk-benefit assessment (see VII.B.5.16.5.).

The applicant or marketing authorisation holder should ensure timely communication with the national medicines authorities for relevant regulatory evaluation and actions, as appropriate (see also XVI.C.2. and Modules V and VII).

XVI.C.1.3. Healthcare professionals and patients

Healthcare professionals and patients hold no legal obligations with respect to the implementation of the pharmacovigilance legislation. Nonetheless the cooperation of healthcare professionals and patients is paramount to the success of educational programmes and/or controlled access programmes in order to optimise the risk-benefit balance. It is desirable that they give careful consideration to any additional risk minimisation measure which may be introduced for the safe and effective use of medicines.

XVI.C.2. Impact of risk minimisation measures effectiveness on RMP/PSUR

PSUR and RMP updates should include a summary evaluation of the outcome of specific risk minimisation measures implemented to mitigate important risks in the Arab Country concerned. In the RMP, the focus should be on how this informs risk minimisation and/or pharmacovigilance planning. In the PSUR, there should also be evaluation of how the implemented measures impact on the safety profile and/or risk-benefit balance of the product. In general, the focus should be on information which has emerged during the reporting period or since implementation of the most recent risk minimisation measure(s) in the Arab Country concerned. Where there is parallel submission of a PSUR and a RMP update, the use of a common content Module should be considered (see GVP Modules V and VII).

Results of the assessment(s) of the effectiveness of risk minimisation measures should always be included in the RMP. As part of this critical evaluation, the marketing authorisation holder should make observations on factors contributing to the success or weakness of risk minimisation measures. This critical analysis may include reference to experience in other countries worldwide, when relevant.

The evaluation of the effectiveness of risk minimisation measures should focus on whether these have succeeded in minimising risk. This should be analysed using a combination of process and outcome indicators, as described in XVI.B.3.. It may be appropriate to distinguish between risk minimisation measures implemented at the time of initial marketing authorisation and those introduced later in the post-authorisation phase.

When presenting the evaluation of the effectiveness of a risk minimisation measure, the following aspects should be considered:

1. The evaluation should provide context by
    a. briefly describing the implemented risk minimisation measure(s),
    b. defining their objective(s), and
    c. outlining the selected process and outcome indicators.
2. The evaluation should incorporate relevant analyses of the nature of the adverse reaction(s) including its severity and preventability. Where appropriate logistical factors which may impact on clinical delivery of the risk minimisation measure should also be included.
3. The evaluation should include an examination of the delivery of the risk minimisation measures in routine clinical practice, including any deviation from the original plan. Such an evaluation may include the results of drug utilisation studies.
4. Outcome indicators (i.e. adverse reaction frequency and/or severity; other safety-related outcomes) should normally be the key endpoint when assessing the attainment of risk minimisation measures objectives.

Proposals for changes to enhance risk management should be presented in the national appendix of the PSUR. The RMP should be updated to take account of emerging information on the effectiveness of risk minimisation measures.

In general, the frequency of RMP updates should be proportionate to the risks of the product. The focus of RMP updates should be on the risk minimisation measures and in providing updates on the implementation of those measures where applicable. If there is a consequential change to the summary RMP, this should also be highlighted in the cover letter. Changes to the product information should not be proposed via a standalone RMP update but rather a variation application should be submitted. A PSUR can also result directly in an update to product information.

XVI. Appendix 1. Key elements of survey methodology

Surveys are systematic methods of collecting primary data directly from a sample of participants from a larger population. These are conducted in order to characterise the larger population and may be cross-sectional (one-time only) or longitudinal (repeated over time).

In the context of the evaluation of the effectiveness of risk minimisation measures a survey can be conducted to evaluate understanding, knowledge and behaviour resulting from educational interventions in a specified target population with respect to the safety and risk management of a medicinal product.

The survey methodology might not be the most appropriate approach for the evaluation of behaviour, since surveys collect and analyse self-reported data from healthcare professionals and patients. Furthermore, participation in a survey in itself may introduce behaviour changes or may not be representative of the target users given that participation is more likely amongst engaged healthcare professionals and/or more motivated or educated individuals.

As a minimum, the following elements should be considered in the design and implementation of a survey in order to minimise potential biases and to optimise the generalisability of the results to the intended population:

1. Sampling procedures and recruitment strategy;
2. Design and administration of the data collection instrument (s);
3. Analytical approaches;
4. Ethics, privacy, and overall feasibility of a study.

XVI.App1.1. Sampling procedures and recruitment strategy

In any survey, the sampling frame and recruitment of participants may be subject to selection bias leading to a study population that is not similar to, or representative of, the intended population in one or more aspects. Furthermore, it should be considered that a bias cannot be eliminated only by increasing the sample frame, sample size and response rate. Bias can be minimised by selecting the optimal sampling frame, taking into account age, sex, geographical distribution and additional characteristics of the study population. Bias can also be minimised by assuring the sample contains appropriate diversity to allow stratification of results by key population characteristics (e.g., by oversampling a small but important subgroup). Key elements to be considered in the sampling frame include age, gender, geographical distribution, and additional characteristics of the study population. For example, in a physician survey, the strategy for randomly selecting the study sample should consider whether a general random sample would be sufficient or if the sample should be stratified by key characteristics such as specialty, type of practice (e.g., primary care, specialist ward, academic institution). In a patient survey, income and education, medical condition(s), chronic vs acute use, should be considered.

In addition to the overall representativeness of the target population the recruitment strategy of a survey should give careful consideration of the potential recruitment sources. For the recruitment of

healthcare professionals, sponsor lists, web panels, professional and learned societies may represent feasible approaches. However, their representativeness for the intended target population of physicians needs to be carefully reviewed for each study. For patient recruitment the relevant clinical setting, existing web-panels, and patient advocacy groups should be considered. A recruitment strategy should be designed while accounting for the chances of achieving accurate and complete data collection.

Efforts should be made to document the proportion of non-responders and their characteristics to evaluate potential influences on the representativeness of the sample.

XVI.App1.2. Design and administration of the data collection instrument(s)

Data collection approaches in a survey may vary from in-person interview, testing, and measurement or collection of biological samples as for routine clinical practice, to telephone interview, web-based or paper-based questionnaires. Audio computer-assisted self-interviewing (A-CASI), interactive voice response systems (IVRS), or mixed mode approaches may also be appropriate. The choice of the most suitable data collection approach will depend on the target population characteristics, the disease and the treatment characteristics and the data to be collected.

Each data collection approach will require the ad hoc design of one or more specific instruments. Nonetheless general design considerations that may apply to all instruments include the following:

- Burden to participant: e.g. length or duration, cognitive burden, sensitivity to participant;
- Clarity and sequence of questions: e.g. use of unambiguous language, minimising assumptions, starting with the most important questions and leaving sensitive questions until later;
- Completeness of responses: e.g. structure questions in order to lead to a single unambiguous answer, allow for choices such as “unknown” or “don’t know”;
- Layout of data collection instrument: e.g. clear flow, technology-assisted guides (avoid patterns, reminders for non-response and visual images);
- Testing and revision of instrument: e.g. formal testing using cognitive pre-testing such as one-to--one interviews, probing questions, interview guide or trained interviewer, and “think aloud” process;
- Incentives to improve response rate: e.g. fed back aggregated data to the survey participants.

XVI.App1.3. Analytical approaches

The key analytical elements of a survey should include:

- Descriptive statistics, such as:
  - The percentage of participants responding correctly to knowledge questions;
  - Stratification by selected variable;
  - Data on no-response or incomplete response;
- Comparison of responders and non-responders characteristics (if data available);

- Comparison of responders and overall target population characteristics.

When survey results are weighted, the following key points should be considered:

- Differences in selection probabilities (e.g. if certain subgroups were over-sampled);
- Differences in response rates;
- Post-stratification weighting to the external population;
- Clustering.

Examples of stratified analyses of physician's survey include the following:

- Specialty of physician;
- Geographic location;
- Receipt of any educational material;
- Volume of prescribing.

XVI.App1.4. Ethics, privacy and overall study feasibility

Ethical and data privacy requirements are not harmonised across the Arab Countries, with notable differences in national (or regional) processes. National (or regional) differences may exist regarding the appropriateness of providing incentives to survey participants. There may also be privacy considerations in allowing contact with physicians based on a prescriber list that is held by a pharmaceutical company.

The overall feasibility assessment of a study is a key step in the successful implementation of a survey. For clinical-based data collection, key elements of such an assessment include:

- Gathering information on site and characteristics of study population (patients or healthcare professionals);
- Estimating reasonable study sample size, the number of sites required to achieve the sample size, and approximate length of the data collection period (e.g. based on estimated patient volume, frequency of patient visits, and expected patient response rate);
- Evaluating site resources and interest in the study.

Key elements of a feasibility assessment may be different for other study designs (e.g. web-based recruitment and data collection) and for physician assessments.

Guideline on good pharmacovigilance practices (GVP)
For Arab Countries

GVP: Product- or population-specific considerations (P part)

P.I: Vaccines for prophylaxis against infectious diseases

P.I.A. Introduction

Vaccination is one of the most effective and widely used public health interventions, whose benefits for individuals and the community has been abundantly demonstrated. Prominent examples are the global eradication of smallpox and the elimination of poliomyelitis in most countries. As with any other pharmaceutical product, however, no vaccine is without risks. Robust systems and procedures must be in place to continuously monitor quality, safety and efficacy. Vaccine pharmacovigilance has been defined by the CIOMS/WHO Working Group on Vaccine Pharmacovigilance[54] as the science and activities related to the detection, assessment, understanding and communication of adverse events following immunisation and other vaccine- or immunisation-related issues, and to the prevention of untoward effects of the vaccine or immunisation.

The objective of this Module is to strengthen the conduct of pharmacovigilance for vaccines. It should be noted that the overall objectives and processes of pharmacovigilance are similar for vaccines and other types of medicinal products and this guidance does not replace the information provided in the other modules of the Good Pharmacovigilance Practices (GVP)- Arab. This Module focusses on vaccine-specific aspects and unique challenges that should be borne in mind when designing and implementing pharmacovigilance activities for vaccines.

This Module is relevant to vaccines used for pre- and post-exposure prophylaxis of infectious diseases and does not cover therapeutic vaccines (e.g. viral-vector based gene therapy, tumour vaccines, anti-idiotypic vaccines such as monoclonal antibodies used as immunogens). This guidance is addressed primarily to marketing authorisation holders and competent authorities but may also be useful to other stakeholders (e.g. sponsors of clinical studies, healthcare professionals, and public health authorities).

P.I.B. provides guidance specific for vaccines in relation to the main pharmacovigilance processes described in the Modules of the GVP-Arab. Where applicable, specific recommendations are provided for situations where vaccines are administered in mass vaccination programmes and where a large number of reports of suspected adverse reactions is expected in a short period of time.

P.I.C. provides specific guidance related to the operation of the vaccines safety systems in the Arab Countries.

Other relevant guidance which are acknowledged in the Arab Countries include the EMA Guideline on Clinical Development of Vaccines[55], guidance on design and specific aspects of clinical trials to be conducted pre and post marketing authorisation, and the EMA Guideline on the Exposure to Medicinal Products During Pregnancy: Need for Post-Authorisation Data[56](see Annex III).

[54] Council for International Organizations of Medical Sciences (CIOMS). Definition and application of terms of vaccine pharmacovigilance (report of CIOMS/WHO Working Group on Vaccine Pharmacovigilance). Genève: CIOMS; 2012

[55] EMEA/CHMP/VWP/164653/2005, available on EMA website http://www.ema.europa.eu.

[56] EMEA/CHMP/313666/2005, available on EMA website http://www.ema.europa.eu.

P.I.A.1. Terminology

It is acknowledged that the term Adverse Event Following Immunisation (AEFI) is used at international level. The term is defined as any untoward medical occurrence which follows immunisation and which does not necessarily have a causal relationship with the usage of a vaccine. The adverse event may be any unfavourable or unintended sign, abnormal laboratory finding, symptom or disease. AEFIs have been further classified by the CIOMS/WHO Working Group on Vaccine Pharmacovigilance[54] (see Annex III) into four categories according to possible causes (apart from a coincidental event): vaccine product-related, vaccine quality defect-related, immunisation error-related and immunisation anxiety-related. The term AEFI is not used in this guidance as the term "adverse event" already designates any untoward medical occurrence in a patient administered a medicinal product and which does not necessarily have a causal relationship with this medicinal product (see Annex I).

The terms immunisation (the process of making a person immune) and vaccination (the administration of a vaccine with the aim to produce immune response) have slightly different meanings and are not used interchangeably in this guidance. The term vaccination is generally used unless justified otherwise by the context.

P.I.A.2. Aspects specific to prophylactic vaccines

When conducting vaccine pharmacovigilance, the following aspects should be considered:

- Vaccines are usually administered to otherwise healthy individuals, often very young or vulnerable; they may be administered to a large fraction of the population and vaccination is mandatory in some countries; there is therefore a high level of safety required for vaccines and tolerance to risk is usually low;
- Assessment of causality between adverse events and vaccines may be difficult: several vaccines are often administered concomitantly, it is inevitable that, with high vaccine uptake, incident cases of many natural diseases in given population cohorts will occur in temporal association with vaccination, and considerations of dechallenge and rechallenge are not relevant to many vaccines which are administered only once or have long-term immunological effects;
- Vaccines are complex biological products which may include multiple antigens, live organisms, adjuvants, preservatives and other excipients, and each of these components may have safety implications; variability and changes in the manufacturing process, new components and new production and administration technologies may impact on safety, and this may require specific pharmacovigilance systems;
- The benefit-risk balance for vaccines also depends on factors acting at the population level, including the incidence, geographical distribution, seasonal characteristics and risk of transmission of the infectious disease in the target population, the proportion of infected persons with a clinical disease, the severity of this disease, vaccine coverage and community immunity;
- Concerns raised by the public may have an impact on the vaccination programme and should be adequately addressed;

- Effective communication about safety of vaccines and vaccination is difficult: perceptions of harm may persist despite evidence that a serious adverse event is not related to the vaccination, and communicating about vaccine safety to multiple audiences (e.g. healthcare providers, patients and parents) is complex.

P.I.A.3. Changes of the benefit-risk balance

The benefit-risk balance of many vaccines is dynamic and may change over time, or may appear to change over time, and this may impact on pharmacovigilance activities. Factors associated with these changes include their efficacy and effectiveness in vaccination programmes and their biological variability.

P.I.A.3.1. Efficacy and effectiveness

Unlike most medicinal products which are given to treat an illness, prophylactic vaccines offer the potential to significantly reduce, or even eradicate, communicable diseases. This introduces a real dynamic to the balance of risks and benefits, whereby the former may outweigh the latter over time (e.g. live oral polio vaccine and vaccine-associated paralytic polio). This may decrease tolerance to the risks of vaccines.

P.I.A.3.2. Biological variability

Unlike most medicines which are composed of relatively small molecules, vaccines are often highly complex multi-component products manufactured from biological systems that are inherently variable over time and between manufacturers (and sometimes between different production plants of the same manufacturer). As with other biological products, the safety, quality and efficacy of vaccines are as dependent on the product-specific manufacturing process as on the inherent profile of active antigens and excipients.

Due to this biological variability, the safety profile of vaccines with well-established safety profiles demonstrated by substantial use over many years may change over time. Such changes may be unpredictable and may arise from slight modifications in the manufacturing process or unintended quality deviations. Such changes can also be batch-specific. Furthermore, introduction of new or more sensitive assays may reveal previously unknown impurities or adventitious agents which may warrant a re-evaluation of quality and clinical safety.

This variability underlines the importance of brand-specific, and even batch-specific, pharmacovigilance activities for vaccines, and for traceability and continuous surveillance even for ‘well-established’ vaccines.

P.I.A.4. Aspects related to vaccination programmes

Most vaccines are ‘universal’, i.e. they are offered routinely to everyone in a given population cohort via a national public health programme. A typical new vaccine may achieve nearly 90% coverage in a given age group over a relatively short time period. Vaccines may also be offered to population cohorts via a targeted ‘campaign’ to tackle a specific infectious disease outbreak at a

given point in time or under special circumstances, such as in a national emergency, military or pandemic situation.

Such vaccination programmes are associated with a variety of challenges for pharmacovigilance. The key ones include:

- A large number of suspected adverse reaction reports in a short time period may require resources for processing, analysing, presenting and communicating data;
- It is inevitable that rare or serious incident illnesses will occur in temporal association with vaccination; new suspected adverse reactions must be very rapidly investigated and distinguished from coincidental illnesses;
- Lack of a comparable unvaccinated concurrent cohort requires alternative statistical and epidemiological methods to allow appropriate analysis of safety, e.g. case-only designs (see Appendix 1 of Module VIII and the ENCePP Guide on Methodological Standards in Pharmacoepidemiology ”Annex III”);
- Mass vaccination in a short time period may be associated with very unique business continuity and infrastructure constraints; under such circumstances, specific consideration should be given to adapting pharmacovigilance plans to meet these challenges and ensure that resource is prioritised and necessary technical requirements are met (see Module I for public health emergency planning);
- The vaccinated population may include immunocompromised individuals, including those infected with human immunodeficiency virus (HIV), whose clinical status may not be known at the time of vaccination and who may be at a higher risk of risk of occurrence of the infectious disease targeted by the vaccine and of impaired immune response to vaccination, in particular when vaccinated with live vaccines.

P.I.B. Structures and processes

P.I.B.1. Risk management system

Most aspects of Module V on risk management systems are as applicable to vaccines as to other medicinal products. P.1.B.1. supplements that Module and presents vaccine-specific aspects of the risk management plan (RMP).

P.I.B.1.1. RMP part I “Product overview”

This section should describe the intended purpose and impact of the vaccine, e.g. whether it is intended to prevent a disease or serious outcomes of the disease. It should provide information relevant to the safety of the vaccine and describe:

- The type of vaccine, e.g. whether it is a live attenuated viral or bacterial vaccine, an inactivated vaccine, a vaccine based on proteins, polysaccharides or protein-conjugated polysaccharides, a genetically engineered vaccine or a novel concept (e.g. temperature selected mutants);
- Details of combined vaccines, where two or more vaccine antigens are combined in one

pharmaceutical preparation in order to prevent multiple diseases or one disease caused by different serotypes;

- Any new technology or novel delivery systems such as viral and bacterial vectors or patches, or alternative route of administration such as nasal administration;
- Any immunogenic adjuvants, stabilisers, preservatives, excipients and residual material from the manufacturing process, including the immunological mode of action of any novel adjuvant.

P.I.B.1.2. RMP part II "Safety specification"

P.I.B.1.2.1. RMP module SI "Epidemiology of the indications and target population"

This section should focus on the natural history of the target disease, highlighting any difference between countries as appropriate. It should discuss any relevant examples of the impact of previous and similar vaccines on the disease. For vaccines already included into a vaccination programme, the impact of the vaccine on the epidemiology of the vaccine-preventable condition should be considered.

P.I.B.1.2.2. RMP module SII "Non-clinical part of the safety specification"

This section should present findings of pre-clinical testing related to the antigen, the adjuvant, impurities, contaminants and the vaccine as a whole, and to interactions of the vaccine components, as well as any impact these findings have on the clinical testing and post-authorisation surveillance.

Cells from human, animal (including insects), bacterial or yeast origin may be used in an early step of the manufacturing process. As a consequence, residual proteins of the host cells may be present in the final product. As these impurities may consist of proteins that have structural homology with human proteins, potential harm caused by these residuals should be discussed, including any need for clinical testing.

Preservatives and stabilisers may not be immunologically inert (e.g. polygeline). Removal of a preservative and/or stabiliser from a well-established vaccine, or change of the source of any vaccine component, may have an impact on the safety profile of the vaccine and may require amendment of the RMP to include non-clinical data on the modified vaccines.

Vaccine-related quality aspects should be discussed in this section if relevant to safety. Manufacturing of medicines in biological systems, such as fermentation of bacteria, growth of virus in cell culture or expression of proteins by recombinant technology, may introduce variability within certain limits of the composition of the final product. In principle, contamination with unwanted infectious agents and other risks linked to any aberrant material cannot be totally excluded. These potential risks should be considered as they may result in adverse reactions.

P.I.B.1.2.3. RMP module SIV "Populations not studied in clinical trials"

Sample size and duration of clinical trials should be discussed in terms of power to detect common and uncommon adverse reactions and to address long-term risks. Limitations of the clinical trials should also be presented in terms of the relevance of inclusion and exclusion criteria in relation to the target population for vaccination.

Populations to be considered for discussion should include:

- Special age groups

  Immunological responses to vaccines depend on the independent and coordinated function of innate and adaptive immune responses which evolve with age. Differences of the immune response in different age categories may not only translate to different efficacy and effectiveness of vaccines, but also to differences in the safety profile. Adverse reactions may occur solely in certain age categories, e.g. hypotonic-hyporesponsive episodes in young children. Furthermore, the frequency of adverse reactions may change in relation to age. Targeted surveillance of adverse reactions in different age groups may be warranted.

- Pregnancy

  Although most live attenuated vaccines are contraindicated in pregnant women due to the known or suspected risk of transplacental infection of the foetus, inadvertent exposure during pregnancy cannot be totally excluded. Risk to the developing foetus from vaccination of the mother with an inactivated vaccine during pregnancy is considered theoretical but should be discussed, including data collected in the post-authorisation phase if available.

- Immunocompromised individuals

  Immunocompromised individuals, including those infected with human immunodeficiency virus (HIV), may have a higher risk of occurrence of the infectious disease targeted by the vaccine and of impaired immune response to vaccination, in particular when vaccinated with live vaccines. Therefore, the benefit-risk balance in this patient group may need specific consideration.

- Patients with other relevant underlying conditions or comorbidities (e.g. contraindications).

P.I.B.1.2.4. RMP module SVI "Additional EU requirements for the safety specification"

The following aspects should be addressed in this section:

- Potential for transmission of infectious agents

  For live attenuated vaccines, this section should address aspects such as shedding (including shedding from vaccinated individuals to unvaccinated close contacts), transmission of the attenuated agents to close contacts, risk for pregnant women and the foetus, and reversion to virulence.

  As for all biological products, the potential for infections caused by residuals of biological material used in the manufacturing process as well as contaminations introduced by the manufacturing process should be evaluated and addressed.

- Potential for medication errors

  This section should address potential for vaccination errors and mechanisms put in place to adequately follow-up and investigate the root cause of any errors. Causes of vaccination errors to be considered include:

  - Inappropriate handling or breakdown in the cold chain, which may lead to adverse reactions such as infection due to bacterial contamination of the vaccine, transmission

of blood-borne infection, abscess formation at the site of injection or loss of efficacy/effectiveness; these issues apply particularly to multi-dose container vaccines without preservatives;

- The method of administration (wrong or suboptimal route, inadequate dose, incorrect diluent), which may be associated with adverse reactions or vaccination failure;
- Non-compliance with recommended vaccination schedule, which may lead to vaccination failure;
- Product packaging and branding, which may lead to administration errors, especially if other types of vaccines are used concurrently in the vaccination programme, in which case similar packaging and branding should be avoided;
- Circumstances of a mass vaccination (e.g. in a pandemic) with use of multi-dose vials or with the need for dilution;
- Situations where several vaccines are marketed in a same country for the same indication, which may lead to patients receiving a vaccination series with different products or too many doses of a vaccine.

P.I.B.1.2.5. RMP module SVII "Identified and potential risks"

This section should provide information on the important identified and important potential risks associated with use of the vaccine pre- and post-authorisation.

The following important potential risks should be considered:

- Waning immunity, requiring a continuous evaluation of the need for a booster dose;
- Potential risks anticipated from experience with similar vaccines and vaccine ingredients (considering the biological plausibility); what constitutes "similar" will be a case-by-case decision, based on the disease, the disease target population, the vaccine type, the carrier protein or other criteria, as scientifically appropriate;
- Potential risks associated with concomitant administration of several vaccines, such as for paediatric vaccines or vaccines used in travel medicine;
- Potential interactions with medicinal products usually given to the target population or administered as a prophylactic treatment (e.g. antipyretics in order to minimise adverse reactions);
- Syndromes closely resembling wild-type disease, caused on rare occasions by some live attenuated vaccines (e.g. vaccine-induced measles meningitis or encephalitis, yellow fever vaccine and viscerotropic disease); in these cases, host risk factors such as age, gender and immune status should be described and the need for further investigations should be addressed, including clinical, serological and immunochemical analyses, and antigen detection, quantification and sequence analysis; certain strains may also be associated with adverse events usually seen with the wild-type disease;
- Adverse events proposed to be reported and assessed with high priority, because, based on experience with the vaccine concerned or similar vaccines in terms of manufacturing process,

composition (e.g. adjuvants), immunogenicity and novelty, they represent potential risks that would need immediate investigation or regulatory action, they could lead to a change in the benefit-risk balance of the vaccine, or they would require prompt communication to the public by regulatory or public health authorities; proposal for such adverse events of special interests (AESIs) may be particularly useful in situations of a mass vaccination programme where it is expected that a large number of adverse reactions may be reported and their processing may need to be prioritised.

The information on potential mechanisms for each identified or potential risk should include available data on association of the risk with the antigen itself, any other ingredient of the vaccine, including adjuvants, stabilisers, preservatives or residuals of the manufacturing process, the target population, interactions with other vaccines or medicinal products or the vaccination schedule. If some of these factors are clearly associated with some identified or potential risks, it may be appropriate to present these risks in different categories.

P.I.B.1.2.6. RMP module SVIII "Summary of the safety concerns"

This section should include a summary of the safety concerns (important identified risks, important potential risks and missing information).

Missing information to be considered includes long-term duration of protection, waning immunity and need for (a) booster dose(s) (in absence of information justifying their classification as potential risks) and the possible clinical impact of vaccination schedules and target population which differ from those studied pre-authorisation.

P.I.B.1.3. RMP part III "Pharmacovigilance plan"

What constitute routine and additional pharmacovigilance activities is described in Module V.

The methodology for data collection in both routine and additional pharmacovigilance activities for vaccines should allow data retrieval and analysis by age groups (including premature infants, neonates, infants and the elderly), number of doses, different vaccination schedules and defined risk factors or underlying diseases.

P.I.B.1.3.1. RMP section "Routine pharmacovigilance activities"

Where routine pharmacovigilance activities normally used by the marketing authorisation holder for medicinal products have been adapted to vaccines, these amendments should be described in this section, for examples alternative methods to perform signal detection or alternative algorithms to evaluate individual case safety reports.

Where appropriate, this section should describe routine pharmacovigilance activities put in place for the surveillance of the following events and reactions:

- Serious but rare adverse reactions (even if the sole aim is to provide reassurance on safety);
- Batch-related adverse reactions, including the measures taken to clearly identify the name of the product and the batch numbers involved in suspected adverse reactions (see Module VI) and a description of how traceability of manufacturing changes will allow identify any related adverse reactions;

- Identified and potential interactions with co-administration of other vaccines, including the increased risk for adverse reactions and clinically relevant immunological interference;
- Possible safety concerns reported with combined vaccines such as increased frequency or severity of known adverse reactions (local or systemic), as small differences of local or systemic adverse reactions between the combined vaccine and the precursor (combined or individual) vaccine(s) are usually not detected in pre-authorisation studies;
- Any adverse events of special interest (AESIs) identified as an important potential risk in the safety specification; standard case definitions should be provided (e.g. Brighton Collaboration case definitions[57]) and age-stratified data on incidence rates in the population targeted by the vaccination programme should be compiled; if such data do not exist, they should be included in the pharmacovigilance plan as data to be collected in the post-authorisation phase (see P.I.B.1.3.2.);
- Inappropriate use of vaccines and patterns of error;
- Cases of breakthrough infections, which are expected without necessarily indicating a problem with the vaccine, as vaccines and vaccination programmes are not 100% effective; although this issue cannot be fully investigated via spontaneous reporting, reports of vaccine failure can nonetheless generate signals and risk factors should be analysed (e.g. obesity, age, smoking status, vaccination schedule, concomitant disease); appropriate case definitions and validated analytical tests for confirmation of the infective agents should be used whenever possible and the recommendations of the CIOMS/WHO Working Group on Vaccine Pharmacovigilance[54] should be considered for the definition and classification of cases of vaccination failure;
- Adverse reaction reports indicating a possible reversion to virulence, especially for new live attenuated vaccines; validated and standardised assays, including assays to distinguish between wild and vaccine strains, should normally be implemented prior to marketing authorisation for appropriate case assessment.

As part of the routine follow-up of adverse reactions, data should be collected (in addition to data on the patient, the adverse reaction and the vaccination history) on:

- The vaccination schedule and the route of administration;
- The vaccine and the diluent (if applicable), including manufacturer(s) and batch number(s);
- In case of a suspected quality defect, batch release specifications, expiry date(s) and laboratory test results about the batch if appropriate, and distribution and administration-related data, such as storage and handling conditions for vaccines in the healthcare institutions where vaccination took place;
- Relevant comorbidities in the target population (including autoimmune disorders).

Any arrangements established to promptly investigate any emerging issues, such as access to electronic health records, registries (e.g. pregnancy registries) or other data sources should be described in this section.

[57] Available on Brighton Collaboration website http://www.brightoncollaboration.org.

P.I.B.1.3.2. RMP section "Additional pharmacovigilance activities"

In addition to the investigation of important identified risks, important potential risks or missing information, additional pharmacovigilance activities may be needed in the following situations:

- To detect strain replacement phenomena (with genotyping of circulating strains as necessary) for vaccines that may protect against only some types of organisms within a species;
- To address the pattern of shedding, transmissibility to contacts and the potential of the strain to survive in the environment;
- To establish evidence of safety for novel vaccines or for vaccines with a novel adjuvant, in order to:
    - assess the risk of occurrence of rare or delayed onset adverse reactions, local or systemic;
    - detect occurrence of auto-immune diseases and immune-mediated reactions resulting from a synergistic action of the adjuvant and the biologically active antigen;
- To assess the effectiveness of the vaccine, especially where pre-authorisation data are limited;
- To investigate clusters of reported adverse events/reactions;
- Where spontaneous reports raise concerns that a higher than expected rate of vaccine failures and breakthrough infections in certain risk groups exists.

Where additional investigations regarding the impact of different vaccination schedules are needed, it is acknowledged that it might not be feasible to study all recommended priming and booster schedules in the Arab Country concerned, but a rationale for further evaluation should be presented (e.g. studying the most accelerated schedule based on 2 or 3 doses) and the availability of systems for collecting data in different countries should be investigated.

A pregnancy register may be needed to address risks of the vaccine in pregnant women, in which case the design of the registry should be provided as part of the RMP. It should allow identification of spontaneous abortions, stillbirths and congenital malformations with an adequate duration of follow-up of the offspring. Detailed information on vaccine exposure (including number of doses and gestational age at the time of exposure) before and/or during pregnancy should be collected. The Guideline on the Exposure to Medicinal Products During Pregnancy: Need for Post-Authorisation Data (see Annex III) and the Systematic overview of data sources for drug safety in pregnancy research [58] (see Annex III) should be consulted, these European guidelines are acknowledged –from scientific aspects- in the Arab Countries.

Where adverse events of special interest (AESIs) are presented in the safety specification as important potential risks and baseline/background incidence rates of those AESIs in the target population are not available, it may be necessary to design a study to collect this information in order to provide rapid answers to vaccine safety concerns emerging from spontaneous reports of suspected adverse reactions. The types of data sources (e.g. in-patient or out-patient databases)

[58] Charlton R and de Vries C, for the European Medicines Agency. Available at http://www.encepp.eu/structure/documents/Data_sources_for_medicines_in_pregnancy_research.pdf

available to estimate background incidence rates will differ across countries and is likely to impact diagnostic validity in terms of sensitivity and specificity. The study design should allow differentiation between prevalent and incident cases. Furthermore, bias could arise from misclassification of disease type or changes in diagnostic criteria and disease management over the study period. Whenever possible, data should be stratified by age, sex, geographical region as well as by other potentially relevant risk factors or confounders. If relevant, seasonal variability should be taken into account.

In exceptional circumstances (for example in a pandemic with mass vaccination), national medicines authorities and marketing authorisation holders may agree on an additional system to rapidly exchange information on emerging safety data whose submission timelines would depend on the extent of vaccine exposure, epidemiological situation and emerging risk. For example, a structured worksheet could present the observed and expected numbers of cases and integrate simple signal detection methods discussed in P.I.B.4., such as observed-to-expected analyses. Where such an additional system has been agreed, its inclusion as an additional pharmacovigilance activity in the RMP, along with information on its rationale, format and periodicity, should be discussed between the marketing authorisation holder and the national medicines authority.

Appropriate national communications to optimise and facilitate reporting may be proposed in specific situations where mass vaccination takes place and prompt identification and evaluation of safety concerns are needed. This communication should involve collaboration between marketing authorisation holders and national regulatory and public health authorities to ensure provision of information to patients to describe which vaccine they have used, the batch number and how events can be reported.

P.I.B.1.4. RMP part IV “Plans for post-authorisation efficacy studies”

Plans for post-authorisation efficacy studies (PAES) may include the assessment of vaccine efficacy/effectiveness and immunogenicity in order to get additional information on waning immunity, long-term protection, cross-protective efficacy/effectiveness and the most appropriate use of the vaccine (e.g. the need for booster doses in at least some population groups, such as immunodeficient individuals, to maintain adequate protection over time).

P.I.B.1.5. RMP part V “Risk minimisation measures”

In principle, regulatory tools and risk minimisation activities for vaccines are similar to those used for other medicinal products (see Module XVI). Additional risk minimisation activities should consider the diverse settings of use of vaccines within and outside (e.g. travel clinics) vaccination programmes.

Appropriate communication to healthcare professionals by marketing authorisation holders and regulatory and public health authorities is a critical component of risk minimisation aiming to avoid errors in vaccine handling and vaccine administration and to reiterate warnings and precautions. Routine risk minimisation measures such as the Summary of Product Characteristics and the Package Leaflet are the most used channels of communication to the healthcare professionals (SmPC) and the patients for vaccines. To further minimise the risks associated with the vaccination (e.g. medication errors) and to facilitate the traceability of vaccine’s brandname and batch number

in the reporting of adverse events, the MAH should also consider labelling and packaging as risk minimisation tools.

P.I.B.2. Periodic safety update report

In addition to information which should be provided in the periodic safety update report (PSUR) for all medicinal products (see Module VII), special consideration should be given in PSURs for vaccines to any potential impact on safety of changes in the manufacturing process. Issues related to batch(es), as well as age-related adverse reactions should be evaluated. If relevant, the potential for local and systemic adverse reactions should be analysed for different doses of the vaccine and also across different vaccination schedules.

The following data should also be summarised and analysed in the PSUR:

- Reports of vaccine failure, lack of efficacy/effectiveness;
- Vaccination errors;
- Vaccination anxiety-related reactions such as syncope;
- Literature data with information relevant to other similar vaccines and vaccine components such as stabilisers, preservatives and adjuvants.

If concomitant vaccination with another vaccine is specifically mentioned in the SmPC, co-administration of vaccines should be analysed separately and the analysis be summarised in the PSUR if there is a safety concern. The data should also be analysed for new concerns regarding concomitant vaccination, independently of whether concomitant use is mentioned in the SmPC or not.

P.I.B.2.1. Integrated benefit-risk analysis

When a new or changing risk is identified, it is important to re-evaluate the benefit of the medicinal product using all available data and estimate the impact of the new or changing risk on the benefit-risk balance of the vaccine. Benefits may include prevention of the target disease, severity of symptoms, hospitalisation, complications, effect of target disease on offspring (in case of vaccination of pregnant women) and any other clinical outcome relevant for individual patients.

P.I.B.3. Post-authorisation safety studies

Objectives, methods and procedures for post-authorisation safety studies (PASS) as described in Module VIII should be followed.

Appendix 1 of Module VIII presents a range of methods for post-authorisation safety studies (PASS). Controlled clinical trials and prospective cohort studies are considered to provide the highest level of evidence but may not be possible to conduct in many situations, especially for rare or long-term risks which may only become evident several years or even decades after vaccination. In this case, cohort studies based on secondary data collection could be designed, whereby the group in whom the adverse events/reactions is studied is defined at the time the study is initiated rather than at the time of vaccination. Traditional study designs such as cohort and case-control studies

may however be difficult to implement where they involve populations with high vaccine coverage rates, an appropriate unvaccinated group is lacking or adequate information on covariates at the individual level is lacking. The ENCePP Guide on Methodological Standards in Pharmacoepidemiology describes alternative study designs that can be used in such cases (see Annex III).

Safety parameters in PASS should be appropriate for the specific vaccine. A pre-requisite is the use of globally accepted standards for case definitions (e.g. those published by the Brighton Collaboration[57]) to compare the frequency of adverse reactions across different studies.

Vaccination registries established in many countries may be used in vaccine safety by creating a source population for large cohort studies. Using a vaccination registry as a source population for studies should be made with caution where enrolment may be biased or there is no systematic collection of exposure in the population. Moreover, a large number of vaccinated individuals is required for the active surveillance of rare adverse reactions by follow-up of a cohort recruited at the time of vaccination.
Non-clinical studies and experimental investigations should also be considered to address safety concerns. This may include virological, bacteriological and/or immunological experiments and other methods to elucidate the aetiology of an adverse reaction.

P.I.B.4. Signal management

The signal management process (see Module IX) covers all steps from detecting signals to recommending actions. A signal is information arising from one or multiple sources, including observations and experiments, which suggests a new potentially causal association, or a new aspect of a known association between an intervention and an event or set of related events that is judged to be of sufficient likelihood to justify verificatory action. In the field of vaccines, a signal may also relate to evidence of reduced efficacy or effectiveness, vaccine failures and quality deviations with potential impact on safety, efficacy or effectiveness (which may be batch-specific).

P.I.B.4.1. Standard case definitions

Standardised case definitions of adverse events are a key element for signal validation and evaluation as they provide a common terminology and understanding of adverse events/reactions and thus allow for comparability of data. Definitions published by the Brighton Collaboration [57] should be used where available. If a Brighton Collaboration definition is not available, the definition which is used should be carefully chosen based on scientific criteria and amenable for justification. Adverse reactions should however be reported even if no standard definition exists.

Standardised MedDRA (Medical Dictionary for Regulatory Activities) Queries (SMQs) [59] may be used in the process of signal detection, validation and evaluation. The sensitivity and specificity of SMQs for vaccines needs to be tested beforehand in order to adequately interpret the results.

[59] Council for International Organizations of Medical Sciences (CIOMS). Development and rational use of Standardised MedDRA Queries (SMQs). Geneva: CIOMS; 2004. Available at http://www.cioms.ch/

P.I.B.4.2. Single report of a serious adverse event

A single report of a serious adverse event occurring in temporal association with the vaccination, especially if the event is unexpected or fatal, could have a detrimental impact on vaccination programmes due to perception of unsubstantiated risks or risk amplification.

A single report of a serious adverse event should be processed as a signal only if there is a possible causal association to the vaccine. This requires adequate information on the clinical course of the event (time to onset, signs and symptoms, results of relevant laboratory and diagnostic tests, evolution, and treatment of the event), medical history, vaccination history, co-medication and details of the vaccine(s) administered (including brandname, batch number, route of administration and dose). Signal validation should also be based on contextual information. Relevant data to be collected for this purpose should include the number of reported cases of a similar event and the probability of occurrence of the event in a non-vaccinated population of the same age category, calculated from clinical trials and observational studies. If adequate data are available on the number of vaccinated individuals of the same age category, the observed and expected numbers of cases should be estimated.

P.I.B.4.3. Signal detection in mass vaccination programmes

In mass vaccination programmes which involve large exposure over a relatively short time period, signal detection should be as real-time as possible, ideally to inform decision-making as the vaccination progresses. It should be adapted to the specific circumstances of the vaccination programme. A particular challenge is the association of such vaccination programmes with very high numbers of spontaneously reported adverse reactions over a relatively short time period. Quickly analysing and communicating the significance of such data is critical. The priority is to rapidly identify possible new signals, but also to rapidly assess the likelihood that the number of reports may be consistent with the expected background incidence in the vaccinated cohort, and thereby possibly coincidental.

P.I.B.4.4. Disproportionality analyses

A statistic of disproportionate reporting (SDR) refers to a statistical association between medicinal products and adverse events. There are several statistical methods used to identify SDRs, such as the proportional reporting ratio (PRR) and Bayesian approaches. Of note, a statistical association does not imply any kind of causal relationship between the administration of the vaccine and the occurrence of the adverse events.

Vaccines may require special consideration when applying such methods (see P.I.A.). Intrinsic differences between vaccines and other medicinal products should be considered, for example frequent reporting of unrelated adverse events in the target population (e.g. Sudden Infant Death Syndrome (SIDS) and infant vaccination, cardiorespiratory events and influenza vaccines). Furthermore, the safety profile of a vaccine may differ substantially within the target population (e.g. higher risks in the youngest age groups). In order to reduce background noise, estimates of disproportionality should be calculated based on a comparison across groups that have a similar age-specific background risk for illness. The choice of the comparator group will depend on the

objectives of the analysis and the information available in the database. A comparison with all medicinal products may result in the detection of reactions specifically related to vaccines, but may also identify a high number of false signals (e.g. SIDS in infants) or already known mild and expected reactions (e.g. local reactions). On the other hand, using only vaccine-related reports available in the database may result in signals of age-related reactions (e.g. cardio-vascular disorders if the vaccine of interest is used in the elderly). In a first step, it may therefore be appropriate to examine results of statistical methods using both comparator groups, or to use reports for other vaccines as the comparator group with a stratification made at least by age.

Stratification by geographical region may also be considered and seasonality of vaccine administration may be relevant for some vaccines and needs consideration. When stratification is performed, results of both adjusted and non-adjusted analyses should be examined. Results could be inspected in each stratum as pooled result of a stratified analysis may miss signals.

P.I.B.4.5. Observed to expected analyses

When there is little time to validate signals, it is essential to make best use of suspected adverse reaction reports. Observed vs. expected (O/E) analyses based on good-quality data can optimise the utility of passive surveillance data, allowing determination of the strength of a signal for prioritisation and further evaluation, and can help in communication of these data (particularly when serious, rare reported events are well within an expected range). O/E analyses are particularly useful during mass vaccination programmes where there is little time to review individual cases and prompt decision-making about a safety concern is required. Although such analyses cannot exclude risks or determine causality, they can help put suspected adverse reaction reports into context and should be used as a routine tool for real-time surveillance. They can also be useful in signal validation and, in the absence of robust epidemiological data, in preliminary signal evaluation.

Key requirements of O/E analyses and statistical methods are described in the ENCePP Guide on Methodological Standards in Pharmacoepidemiology (see Annex III).

It should be kept in mind that certain characteristics of an adverse event increase its probability of being reported, such as when the outcome is unexpected, severe or disabling, when it is poorly understood and when it affects a previously healthy person. Also, the shorter the time that has elapsed between the vaccination procedure and the event, the more likely it is to be perceived as a trigger and subsequently be reported. Conversely, events that are expected, common and mild, or occur late after vaccination, are less likely to be reported.

Given uncertainties around the ‘observed’ number of cases, the levels of diagnostic certainty, the level of vaccine exposure and the background incidence rates, sensitivity analyses should be applied in statistical analyses around assumed levels of under-reporting, numbers of ‘confirmed’ and ‘non-confirmed’ cases (using several categories of diagnostic certainty as appropriate), numbers of vaccinated individuals or vaccine doses administered and confidence intervals of incidence rates.

P.I.B.4.6. Signal evaluation

For the evaluation of validated signals based on individual case reports of suspected adverse reactions, complete and accurate individual records documenting administration of all vaccines

should be provided, together with information on the date of vaccination, product administered, manufacturer, batch number, site and route of administration, detailed description and course of the adverse event/reaction as well as therapeutic intervention. Information on rechallenge, where applicable, should be recorded. The investigation of clusters of reported adverse events or adverse reactions is described in the report of the CIOMS/WHO Working Group on Vaccine Pharmacovigilance[54].

Appropriate follow-up of serious suspected adverse reactions is essential, including data on possible alternative causes. It may be helpful to develop pre-defined check lists or formats for those reactions which may be anticipated from experience with similar vaccines in order to consistently ascertain relevant clinical information and support the quality of causality assessment for individual cases (see also Module VI).

The following aspects need to be considered for signal evaluation:

- The incidence of the natural disease in the target population for vaccination and its seasonality, as this population is usually large and heterogeneous and coincident adverse events are likely to occur;
- Additives and excipients used for the production, inactivation, preservation, and stabilisation of the vaccine;
- Past experience with similar vaccines, adjuvants and types of antigens, in order to identify adverse reactions which are unexpected and for which a causal relationship remains to be elucidated;
- Distinction between suspected adverse reactions to the vaccine and those reflecting the clinical picture of the disease for which vaccination has been given (e.g. rash following measles vaccination);
- Public information (public campaign, press) that may favour certain reports in some periods.

P.I.B.5. Batch recall and quarantine

In order to protect public health, it may become necessary to implement urgent measures such as to recall or halt the distribution (quarantine) of (a) batch(es) of a vaccine due to a suspected batch-specific signal or defect.

The principle of public health protection may be particularly relevant in certain situations, e.g. vaccines for healthy children, particularly in case of a localised incident. A vaccine batch recall or quarantine is sometimes taken in the absence of the full facts and evidence and before the assessment of the issue is finalised. However, batch recall or quarantine may have a detrimental impact on the vaccination programme itself, even if absence of association between the suspected batch(es) and the severe adverse events is later demonstrated, and may cause more harm than good. As with any mass intervention, vaccination programmes are inevitably associated with serious adverse events in temporal association with vaccine administration but many of these are coincidental. As a batch recall may also lead to issues of vaccine supply and sometimes a shortage of vaccines, the possibility of a chance association and the availability of a sufficient amount of

vaccines or of alternative vaccines for the vaccination programme should also be considered in this context.

In situations where a batch-specific quality or safety issue has not been confirmed, measures other than recall or quarantine may be warranted initially whilst an investigation is on-going, e.g. providing recommendations on patient surveillance and follow-up post-vaccination. This may be considered when recall or quarantine may lead to vaccine supply shortages and alternatives are not widely available.

The following sections present elements that should be taken into account when considering recalling or quarantining batches.

P.I.B.5.1. Data requirements

The following data should be collected as soon as possible and should ideally be available when taking a decision about a batch recall or quarantine:

- Detailed description of the case(s) presented in CIOMS format with narrative(s), including any additional information as appropriate (e.g. laboratory results, autopsy reports, literature);
- Characteristics of the adverse event, e.g. severity, expectedness (new adverse reaction vs. increased frequency of a known adverse reaction), outcome;
- Characteristics of patients presenting the adverse event, e.g. age, concomitant diseases, concomitant vaccination;
- Crude number of cases and reporting rate or incidence rate of the adverse event in the vaccinated population using, if possible, actual vaccine usage data rather than sales data and observed vs. expected calculations of the event observed;
- Time and space clustering of cases, e.g. cases reported by a single hospital, physician or region;
- Geographical distribution (both spatial and numbers of doses used) of the suspected batch(es);
- Manufacturing records of the suspected batch(es) (certificates of analysis, information on deviations observed at in-process controls or manufacturing steps, documentation of recent changes to the manufacturing process);
- Storage and administration conditions of the suspected batch(es);
- Re-analysis of retained samples of the suspected batch(es), focussing, if necessary, on additional parameters to those required for the release of the product.

Time is a critical factor in the evaluation of potential batch-related issues. Marketing authorisation holders should therefore continuously maintain a high level of preparedness to provide the information needed for a quick evaluation of batch-related safety issues. National medicines authorities should investigate any other available source of information that may promptly provide information on similar events (including batch-related information) and provide a preliminary assessment of all available data within a short timeframe.

P.I.B.5.2. Action based on clinical events in the absence of a known quality issue

A batch-specific signal based on an observed clinical event is often based on spontaneous reporting. In the absence of a known quality issue, decision making on a precautionary recall or quarantine is difficult, as a causal association with the vaccine can rarely be established at the time when an initial decision is required.

In the absence of a known quality issue and where there is an apparent increase in frequency or severity of known adverse reactions without serious clinical risk, consideration should be given to the geographical distribution of the suspected batch and of the case(s) at the origin of the signal. If it is established that a suspected batch has been used to a significant extent in many regions/countries and a signal is apparent in only one geographical area, this could potentially indicate a false signal. Conversely, an apparent signal in more than one locality may potentially strengthen the signal and support a recall or quarantine.

For single fatal adverse events, particularly where the cause of death is unknown, the reporting rate of the event relative to both the usage of the vaccine batch and the 'expected' age-specific all-cause mortality should be considered before deciding on a recall or quarantine action (see also P.I.B.4.2). The probability of a chance association should be considered. If a fatal event is initially thought to be a consequence of a known adverse reaction (e.g. due to anaphylaxis), it would not necessarily imply a batch-specific issue requiring a recall or a quarantine. On the other hand, where contamination of a batch is suspected based on individual case details or a localised cluster, due to possible cold chain and handling deviations, localised action should be considered before escalation to a national recall or quarantine.

P.I.B.5.3. Action due to identified quality deviations

Identified quality deviations may be associated with no apparent clinical risks, and may not warrant recall or quarantine. However, quality deviations may result in increased reactogenicity and/or increased frequency of expected adverse reactions (such as severity and frequency of febrile reactions, localised reactions and allergic reactions), or reduced potency, which may necessitate recall of a given batch(es). In the case of a confirmed quality deviation, the decision to recall or quarantine can often be relatively straightforward and supported by the likelihood of clinical risk and availability of alternative batches or products.

P.I.B.6. Safety communication

Appropriate communication about the benefit-risk balance and safe use of vaccines to the target population, vaccinated individuals, their parents/carers, healthcare professionals, health policy makers and the general public is essential for ensuring the appropriate use of vaccines as well as for the implementation of the vaccination programme.

Principles and guidance on safety communication, its planning and effectiveness evaluation is provided in Modules XV and XII. In addition, the following principles should be considered for vaccines.

Being transparent and providing explicit information in lay language to the public regarding the use of (a) vaccine(s) should be fundamental to the communication approach. Incomplete or unclear messages may lead to confusion of the general public and the decision not to vaccinate or not to be vaccinated on unsubstantiated grounds. Communication should help preventing anxiety-related reactions (see Annex I). Any potential risks for specific population groups should be clearly communicated.

Specific safety communication objectives in relation to vaccines may also aim at avoiding errors in vaccine handling and administration and at reiterating warnings and precautions for use.

Safety communication about a vaccine should also describe the benefits of vaccines, explain the risks for individuals and the population of a decrease in vaccination coverage, and explain its impact on disease control. When drafting communication texts, it should be considered that, as vaccination programmes mature, incidence rates of the targeted diseases decrease substantially, and so does personal experience with the disease in a given population. This may result in an increased attention to concerns related to vaccine safety, and information on the target disease itself may need to be provided. It should be considered that risk perceptions may differ between stakeholders, especially when there is uncertainty about a risk. Public confidence in vaccination programmes may only be maintained by knowledge that systems are in place to ensure complete and rapid assessment and to take precautionary measures if needed. Therefore, safety communication about vaccines may also profit from describing key functions of the pharmacovigilance systems.

Communication about vaccines may also include informing vaccinators/healthcare professionals on the management of vaccine-related anxiety and associated reactions, particularly in individuals with special conditions (e.g. pregnancy, puberty, immunosensitive conditions, general anxiety or other mood disorders, epilepsy).

Communication to the public should be a collaborative task undertaken by the industry, regulators and public health organisations, with input from other stakeholders (see Module XII for collection of data on information needs and public concerns and Module XI for mechanisms for public participation).

The processes for planning and implementing safety communication at the level of marketing authorisation holders and national medicines authorities described in Modules XII and XV apply and are interlinked with the risk assessment and communication effectiveness evaluation processes also described in these Modules. Communication interventions may be part of a risk management plan (RMP) (see Modules V and XVI). During the communication planning and implementing phases, international collaboration should be facilitated as necessary. Special planning should be undertaken in case of public health emergencies (see Module I) or pandemics.

Communication planning should include being prepared for frequent public communication needs, such as those regarding excipients, residues, identified or potential risks for individuals with special conditions, coincidental events, temporal versus causal association, a single case of an adverse event rarely identified as a risk, safety monitoring requirements being different to identified risk, or the mock-up concept not being related to an experimental/not tested/not authorised vaccine. For the purpose of quantifying safety concerns, relevant background rates, by age group and sex, of signs and symptoms which are also present in adverse events, whether known to be causally related, suspected to be causally related or likely to be coincidental, should be kept up-to-date, as well as

exposure data. Communication planning should also include preparing standard texts. Frequently needed explanations should be ideally tested by representatives of likely target audiences. Concerns raised by the public should also be addressed by proactively communicating results of benefit-risk evaluations.

National Medicines authorities should ensure appropriate communication with the public and in particular the media. Media monitoring should be especially conducted for vaccines. The media can play an important role in influencing the public perception of vaccine safety, in both a negative and positive way, and information to the media should be given in timely and meaningful manner (see Module XII). In this respect, it is essential to maintain a high level of transparency on how regulatory decisions were reached and on the roles and responsibilities of each stakeholder. In communication materials, reference should be made to published documents.

P.I.C. Operation in the Arab Countries

P.I.C.1. Roles and responsibilities

Stakeholders involved in the process of vaccine pharmacovigilance in the Arab Countries include the target population for the vaccine, consumers of vaccines (vaccinated persons and, in the case of paediatric vaccination, their parents/carers), healthcare professionals, marketing authorisation applicants/holders, sponsors of clinical trials, national medicines authorities, public health authorities recommending vaccination programmes, and the World Health Organization (WHO). Each stakeholder has an important contribution to the vaccine pharmacovigilance process. Efficient collaboration between stakeholders is particularly important in situations of mass vaccination where it is anticipated that a large number of suspected reactions may be reported in a short period of time (e.g. during a pandemic) and it is necessary to quickly assess potential safety issues and take regulatory decisions. In such cases, collaborations should be established prior to the start of the vaccination programme to identify source of data and agree on processes to exchange information.

P.I.C.1.1. Vaccinated persons and parents/carers

Vaccinated persons and their parents/carers may report a suspected adverse reaction to a healthcare professional or directly to the medicines authorities in the Arab Countries or to the marketing authorisation holder. National medicines authorities in Arab Countries should facilitate reporting, for example through a web platform. They should encourage reporting of complete information on the vaccine and the vaccination, including the invented name and batch number. This can be facilitated by providing adequate and easily retrievable information at the time of vaccination, for example with a patient card.

P.I.C.1.2. Healthcare professionals

Healthcare professionals should follow national guidelines regarding the collection, recording and reporting of suspected adverse reactions to vaccines. In vaccination programmes where a physician diagnosing the adverse reaction was not involved in the administration of the vaccine, this physician should document the product name, batch number and other information relevant for the evaluation

of the severe adverse event either from information provided to the vaccinated person or the patient/carer, or by contacting the medical centre or person that provided the vaccine. Any suspected adverse reaction should be reported to the national medicines authorities in the Arab Countries according to national recommendations.

P.I.C.1.3. Marketing authorisation holders

Marketing authorisation holders may establish a specific pharmacovigilance system for vaccines (see Module I).

Marketing authorisation holders should collect and record all available information regarding the distribution of vaccine batches in Arab Country(ies) concerned. Marketing authorisation holders should make an effort to collect information on the numbers of doses of vaccines administered/distributed by batch. They should also take appropriate measures in order to collect and collate all reports of suspected adverse reactions associated with vaccines originating from unsolicited or solicited sources. The definite identification of the concerned product with regard to its manufacturing is of particular importance. Therefore, all appropriate measures should be taken to clearly identify the brandname of the product and the batch number. Where necessary, attempts should be made to contact the patient or healthcare professional reporting the adverse reaction (see GVP Module VI and Appendix 1 on the identification of biological medicinal products). Marketing authorisation holders should communicate as an emerging safety issue (see Module VI) any safety concern related to the vaccine that may impact on its benefit-risk profile.

Marketing authorisation holders should continuously maintain a high level of preparedness to quickly document and investigate safety issues and batch-related issues, as precautionary measures may need to be taken by national medicines authorities in absence of adequate information (see P.I.B.1.3.2).

P.I.C.1.4. National Medicines authorities in the Arab Countries

National medicines and public health authorities in the Arab Country concerned should collaborate for recording, collating, exchanging and integrating all information relevant to the safety surveillance of vaccines. This includes information on the distribution of vaccine batches within the Arab Country concerned and vaccine exposure stratified by batch, age and sex and in the target population (or other characteristics, e.g. pregnant women) where possible. Where a registration system is in place, procedures should allow quick compilation and analyses of data to estimate exposure. Information to be collected and exchanged also include available data on incidence of diseases which may also be adverse events of the vaccine, reports of adverse reactions and their assessment, results arising from specific surveillance programmes, clinical or non-clinical investigations and post-authorisation studies, including safety and efficacy/effectiveness studies, seroepidemiological studies and studies on circulating strains and strain replacement. If the vaccine is anticipated to be used in vaccination programmes, attempts should be made before the start of the vaccination to collect missing data, e.g. background incidence rates of adverse events of special interest. Relevant data sources for vaccine efficacy/effectiveness and benefit-risk evaluation of the vaccine should be identified and data availability should be explored, including possible use by marketing authorisation holders.

National medicines authorities should have in place a web-based reporting system of suspected adverse reactions for patients and healthcare professionals, and should encourage these to provide accurate information on invented names and batch numbers. They should establish channels for an adequate communication to the public and play an important role in unbiased communication, in particular in situations where there is a gap between results of scientific analyses made by experts and public concerns. National medicines authorities should ensure that the public is given important information on pharmacovigilance concerns relating to the use of the vaccines. Media should receive timely and relevant information on the benefit-risk balance of vaccines.

National medicines authorities should collaborate with the World Health Organisation in the field of vaccine safety (see Module XIV).

National medicines authorities should undertake data monitoring of their respective "National Pharmacovigilance and Safety reports databases", signal detection and signal validation for respective nationally authorised vaccines (see Module IX).

P.I.C.2. Reporting of reactions and emerging safety issues

Reporting of suspected adverse reactions and emerging safety concerns should follow the guidance in Module VI. Communication of signals by marketing authorisation holders should follow the guidance of Module IX.

Reports of vaccination errors with no associated adverse reaction should not be reported as individual case safety reports. They should be considered in periodic safety update reports as applicable (see Module VII). When those reports and any suspected quality defect or batch-related issues constitute safety concerns which may impact on the benefit-risk balance of the medicinal product or representing a significant hazard to public health, they should be notified immediately in writing to the national medicines authorities in the Arab Countries where the vaccine is authorised or supplied, this should be done in accordance with the recommendations provided in Module VI.

When a batch-related issue is suspected, activities may include, as appropriate:

- Early distribution of information on the issue via the rapid alert system to other national medicines authorities; this communication may include questions (e.g. on usage of the batch(es) and similar cases reported to them);
- Triggering of the incident management plan;
- Interactions with the WHO and other agencies.

Where a quality defect is suspected, marketing authorisation holders should follow the applicable national procedures.

P.I.C.2.1.Reporting of vaccination failures

Cases of vaccination failures should be reported as cases of lack of therapeutic efficacy within 15 days, in particular with the view to highlight potential signals of reduced immunogenicity in a sub-group of vaccinated individuals, waning immunity or strain replacement. Such a signal may need prompt action and further investigation through post-authorisation studies as appropriate.

P.I.C.3. Risk Management System

A RMP or an update, as applicable may be submitted at any time during a vaccine's life cycle, i.e. during both the pre-and post-authorisation phase (see Module V). In addition, because a change to the manufacturing process of a biological product may potentially have an unpredictable impact on safety, situations where a RMP or RMP update may be required include a significant change in the marketing authorisation, including, on a case to case basis (depending on the nature of the changes), changes in the manufacturing process of the vaccine. Therefore, any potential or theoretical impact on safety, and thereby the possible need to update the RMP, must be considered in this situation.

P.I.C.4. Signal management

Where a signal is based on a single report of a serious adverse event following vaccination, the signal should be validated by the signal identifier (see Module IX and P.I.B.4). Where the report does not meet the criteria for signal validation, it should be tracked by the signal identifier and special attention should be paid to any follow-up information or other cases of the same adverse event (see Module IX).

Vaccines should be subject to additional monitoring (see conditions in Module X) or at the request of the national medicines authority where the optional scope for additional monitoring is applicable (see Module X). In such cases, the periodicity for the monitoring of data from "National Pharmacovigilance and Safety reports database" may be increased. In some circumstances, more frequent monitoring may be proposed by national medicines authority. It should be targeted to a safety concern of interest especially during public health emergencies (e.g. pandemics) and may be applied in the context of custom queries conducted in the "National Pharmacovigilance and Safety reports database" Data Analysis System (see Module IX).

P.I.C.5. Safety communication about vaccines in the Arab Countries

Further to the guidance in P.I.B.6., the following should be considered for safety communications about vaccines in the Arab Countries. Operational details of communication processes may differ according to different scenarios of vaccine use among the Arab Countries and with regard to different vaccines. Also, benefit-risk perceptions may vary between Arab Countries and cultures. Communication in the Arab Countries should be underpinned by transparency on how regulatory decisions were reached and on the roles and responsibilities of each stakeholder in the Arab country concerned (see P.I.C.1.). Where special planning should be undertaken in case of public health emergencies or pandemics, the national medicines authorities should announce requirements and guidance for marketing authorisation holders on their respective webportals.

Guideline on good pharmacovigilance practices (GVP) For Arab Countries

GVP: Product- or population-specific considerations (P part)

P.II: Biological medicinal products

Underdevelopment, expected release fourth quarter 2016

Guideline on good pharmacovigilance practices (GVP) For Arab Countries

GVP: Annexes

Annex I: Definitions

Annex II: Templates

Annex II.1. Template of the risk management plan (RMP) in the Arab Countries in integrated format

Annex II.2. Template of the risk management plan (RMP) in the Arab Countries for generics

Annex II.3. Template of the National Display of the risk management plan (RMP) in the Arab Countries - for MAH/Applicant having Eu RMP

Annex II.4. Templates: Cover page of periodic safety update report (PSUR)

Annex II.5. Templates: Direct healthcare-professional communication (DHPC)

Annex III: Abbreviations

Annex IV: Other Pharmacovigilance Guidance

Annex V: International Conference on Harmonisation of Technical Requirements for Registration of Pharmaceuticals for Human Use (ICH) guidelines for pharmacovigilance

GVP: Annexes

Annex I – Definitions

List of definitions (hyperlinked)

Abuse of a medicinal product
Advanced therapy medicinal product (ATMP)
Adverse event (AE); synonym: Adverse experience
Adverse event following immunisation (AEFI)
Adverse reaction; synonyms: Adverse drug reaction (ADR), Suspected adverse (drug) reaction, Adverse effect, Undesirable effect
Audit
Audit finding(s)
Audit plan
Audit programme
Audit recommendation
Clinical trial
Closed signal
Company core data sheet (CCDS)
Company core safety information (CCSI)
Compassionate use of a medicinal product
Completed clinical trial
Consumer
Crisis
Data lock point
Development international birth date (DIBD)
Development safety update report (DSUR)
Direct healthcare professional communication (DHPC)
EU reference date; synonym: Union reference date
Failure to vaccinate
Generic medicinal product
Good pharmacovigilance practices (GVP) for the Arab Countries
Healthcare professional
Herbal medicinal product
Homeopathic medicinal product
Identified risk
Illegal purposes
Immunological medicinal product
Immunisation
Immunisation anxiety-related reaction
Immunisation error-related reaction
Important identified risk and Important potential risk
Important potential risk
Incident
Individual case safety report (ICSR); synonym: Adverse (drug) reaction report
International birth date (IBD)
Investigational drug
Investigational medicinal product
Labelling
Medicinal product

Medicinal product derived from human blood or human plasma
Minimum criteria for reporting
Missing information
Misuse of a medicinal product
Misuse of a medicinal product for illegal purposes
Name of the medicinal product
Newly identified signal
Non-interventional trial; synonym: Non-interventional study
Occupational exposure to a medicinal product
Off-label use
Ongoing clinical trial
Ongoing signal
Overdose
Package leaflet
Periodic safety update report (PSUR)
Pharmacovigilance
Pharmacovigilance system
Pharmacovigilance system master file (PSMF)
Post-authorisation safety study (PASS)
Potential risk
Quality adherence
Quality assurance
Quality control and assurance
Quality improvements
Quality of a pharmacovigilance system
Quality objectives
Quality planning
Quality requirements
Quality system of a pharmacovigilance system
Reference safety information
Registry
Risk-benefit balance
Risk management plan (RMP)
Risk management system
Risk minimisation activity; synonym: Risk minimisation measure
Risks related to use of a medicinal product
Safety concern
Serious adverse reaction
Signal
Signal management process
Signal validation
Solicited sources of individual case safety reports
Spontaneous report, synonym: Spontaneous notification
Stimulated reporting
Substance
Summary of product characteristics (SmPC)

Target population (treatment); synonym: Treatment target population
Target population (vaccine); synonym: Vaccine target population
Traditional herbal medicinal product
Unexpected adverse reaction
Upper management
Vaccination
Vaccination failure
Vaccine
Vaccine failure
Vaccine pharmacovigilance
Vaccine product-related reaction
Vaccine quality defect-related reaction
Valid individual case safety report
Validated signal

Abuse of a medicinal product

Persistent or sporadic, intentional excessive use of medicinal products which is accompanied by harmful physical or psychological effects.

Advanced therapy medicinal product (ATMP)

A medicinal product for human use that is either a gene therapy medicinal product, a somatic cell therapy product or a tissue engineered products.

Adverse event (AE); synonym: Adverse experience

Any untoward medical occurrence in a patient or clinical trial subject administered a medicinal product and which does not necessarily have a causal relationship with this.

An adverse event can therefore be any unfavourable and unintended sign (e.g. an abnormal laboratory finding), symptom, or disease temporally associated with the use of a medicinal product, whether or not considered related to the medicinal product.

Adverse event following immunisation (AEFI)

See Vaccine pharmacovigilance, Vaccine product-related reaction, Vaccine quality defect-related reaction, Immunisation error-related reaction, Immunisation anxiety-related reaction

Adverse reaction; synonyms: Adverse drug reaction (ADR), Suspected adverse (drug) reaction, Adverse effect, Undesirable effect

A response to a medicinal product which is noxious and unintended[60].

Response in this context means that a causal relationship between a medicinal product and an adverse event is at least a reasonable possibility (see Annex IV, ICH-E2A Guideline).

Adverse reactions may arise from use of the product within or outside the terms of the marketing authorisation or from occupational exposure. Conditions of use outside the marketing authorisation include off-label use, overdose, misuse, abuse and medication errors.

See also Adverse event, Serious adverse reaction, Unexpected adverse reaction, Off-label use, Overdose, Misuse of a medicinal product, Abuse of a medicinal product, Occupational exposure to a medicinal product

Audit

A systematic, disciplined, independent and documented process for obtaining audit evidence and evaluating it objectively to determine the extent to which the audit criteria are fulfilled (see ISO 19011 (3.1)[61]).

[60] In the context of clinical trials, an adverse reaction is defined as all untoward and unintended responses to an investigational medicinal product related to any dose administered.

[61] International Organization for Standardization (ISO); www.iso.org

Audit finding(s)

Results of the evaluation of the collected audit evidence against audit criteria (see ISO19011 (3.4)[61]).

Audit evidence is necessary to support the auditor's results of the evaluation, i.e. the auditor's opinion and report. It is cumulative in nature and is primarily obtained from audit procedures performed during the course of the audit. *See also Audit*

Audit plan

Description of activities and arrangement for an individual audit (see ISO19011 (3.12)[61]).

See also Audit

Audit programme

Set of one or more audits planned for a specific timeframe and directed towards a specific purpose (see ISO 19011 (3.11)[61]). *See also Audit*

Audit recommendation

Describes the course of action management might consider to rectify conditions that have gone awry, and to mitigate weaknesses in systems of management control (see Sawyer LB et al, 2003[62]).

Audit recommendations should be positive and as specific as possible. They should also identify who is to act on them (Sawyer LB et al, 2003[62]). *See also Audit*

Clinical trial

Any investigation in human subjects intended to discover or verify the clinical, pharmacological and/or other pharmacodynamic effects of one or more investigational medicinal product(s), and/or to identify any adverse reactions to one or more investigational medicinal product(s) and/or to study absorption, distribution, metabolism and excretion of one or more investigational medicinal product(s) with the objective of ascertaining its (their) safety and/or efficacy. This includes clinical trials carried out in either one site or multiple sites, whether in one or more Country.

See also Ongoing clinical trial, Completed clinical trial, Investigational medicinal product

Closed signal

In periodic benefit-risk evaluation reports, a signal for which an evaluation was completed during the reporting interval (see Annex IV, ICH-E2C(R2) Guideline).

This definition is also applicable to periodic safety update reports. *See also Signal*

[62] Sawyer LB, Dittenhofer MA. Sawyer's Internal Auditing. 5th ed. Altamonte Springs, FL: The IIA Research Foundation; 2003.

Company core data sheet (CCDS)

For medicinal products, a document prepared by the marketing authorisation holder containing, in addition to safety information, material related to indications, dosing, pharmacology and other information concerning the product (see Annex IV, ICH-E2C(R2) Guideline).

See also Company core safety information

Company core safety information (CCSI)

For medicinal products, all relevant safety information contained in the company core data sheet prepared by the marketing authorisation holder and which the marketing authorisation holder requires to be listed in all countries where the company markets the product, except when the local regulatory authority specifically requires a modification (see Annex IV, ICH-E2C(R2) Guideline).

It is the reference information by which listed and unlisted are determined for the purposes of periodic reporting for marketed products, but not by which expected and unexpected are determined for expedited reporting (see Annex IV, ICH-E2C(R2) Guideline).

See also Company core data sheet

Compassionate use of a medicinal product

Making a medicinal product available for compassionate reasons to a group of patients with a chronically or seriously debilitating disease or whose disease is considered to be life-threatening, and who cannot be treated satisfactorily by an authorised medicinal product (the medicinal product concerned must either be subject of an application for a central marketing authorisation or must be undergoing clinical trials).

Completed clinical trial

Study for which a final clinical study report is available (see ICH-E2F Guideline).

See also Clinical trial

Consumer

For the purpose of reporting cases of suspected adverse reactions, a person who is not a healthcare professional such as a patient, lawyer, friend or relative/parent/child of a patient (see Annex IV, ICH-E2D Guideline).

Crisis

A situation where, after assessment of the associated risks, urgent and coordinated action within the country is required to manage and control the situation *See also Incident*

Data lock point

For a periodic safety update report (PSUR), the date designated as the cut-off date for data to be

included in a PSUR.

For a periodic benefit-risk evaluation report (PBRER), the date designated as the cut-off date for data to be included in a PBRER, based on the international birth date (see Annex IV, ICH-E2C(R2) Guideline).

For a development safety update report (DSUR), the date designated as the cut-off date for data to be included in a DSUR, based on the development international birth date (see ICH-E2F Guideline).

Date includes day and month (see ICH-E2F Guideline).

See also Periodic safety update report, Development safety update report, International birth date, Development international birth date

Development international birth date (DIBD)

Date of first approval (or authorisation) for conducting an interventional clinical trial in any country (see ICH-E2F Guideline).

Development safety update report (DSUR)

Format and content for periodic reporting on drugs under development (see ICH-E2F Guideline).

Direct healthcare professional communication (DHPC)

A communication intervention by which important information is delivered directly to individual healthcare professionals by a marketing authorisation holder or by a medicies authority, to inform them of the need to take certain actions or adapt their practices in relation to a medicinal product.

DHPCs are not replies to enquiries from healthcare professionals.

EU reference date; synonym: Union reference date

For medicinal products containing the same active substance or the same combination of active substances, the date of the first marketing authorisation in the EU of a medicinal product containing that active substance or that combination of active substances; or if this date cannot be ascertained, the earliest of the known dates of the marketing authorisations for a medicinal product containing that active substance or that combination of active substances.

Failure to vaccinate

An indicated vaccine was not administered appropriately for any reason (see CIOMS-WHO [63]).

For interpreting what is appropriate, consider the explanatory note for Immunisation error-related reaction.

[63] Council for International Organizations of Medical Sciences (CIOMS). Definition and application of terms of vaccine pharmacovigilance (report of CIOMS/WHO Working Group on Vaccine Pharmacovigilance). Genève: CIOMS; 2012.

See also Vaccination failure

Generic medicinal product

A medicinal product which has the same qualitative and quantitative composition in active substances and the same pharmaceutical form as the reference medicinal product, and whose bioequivalence with the reference medicinal product has been demonstrated by appropriate bioavailability studies.

Good pharmacovigilance practices (GVP) for the Arab Countries

A set of guidelines for the conduct of pharmacovigilance in the Arab Countries, drawn up based on the European GVP, by the cooperation of national medicines authorities in Arab Countries , and applying to marketing authorisation holders in the Arab Countries and national medicines authorities in Arab Countries.

Healthcare professional

For the purposes of reporting suspected adverse reactions, healthcare professionals are defined as medically qualified persons, such as physicians, dentists, pharmacists, nurses and coroners (see Annex IV, ICH-E2D Guideline).

Herbal medicinal product

Any medicinal product, exclusively containing as active ingredients one or more herbal substances or one or more herbal preparations, or one or more such herbal substances in combination with one or more such herbal preparations.

Herbal substances are all mainly whole, fragmented or cut plants, plant parts, algae, fungi, lichen in an unprocessed, usually dried, form, but sometimes fresh. Certain exudates that have not been subjected to a specific treatment are also considered to be herbal substances. Herbal substances are precisely defined by the plant part used and the botanical name according to the binominal system.

Herbal preparations are preparations obtained by subjecting herbal substances to treatments such as extraction, distillation, expression, fractionation, purification, concentration or fermentation. These include comminuted or powered herbal substances, tinctures, extracts, essential oils, expressed juices and processed exudates.

Homeopathic medicinal product

Any medicinal product prepared from substances called homeopathic stocks in accordance with a homeopathic manufacturing procedure described by the pharmacopoeias currently used officially in the Arab Country concerned. A homeopathic medicinal product may contain a number of principles.

Identified risk

An untoward occurrence for which there is adequate evidence of an association with the medicinal

product of interest (see ICH-E2F Guideline).

Examples include:

- an adverse reaction adequately demonstrated in non-clinical studies and confirmed by clinical data;
- an adverse reaction observed in well-designed clinical trials or epidemiological studies for which the magnitude of the difference, compared with the comparator group on a parameter of interest suggests a causal relationship;
- an adverse reaction suggested by a number of well-documented spontaneous reports where causality is strongly supported by temporal relationship and biological plausibility, such as anaphylactic reactions or application site reactions (see ICH-E2F Guideline.

In a clinical trial, the comparator may be placebo, an active substance or non-exposure.

Adverse reactions included in section 4.8 of the summary of product characteristics (SmPC) are also considered identified risks, unless they are class-related reactions which are mentioned in the SmPC but which are not specifically described as occurring with this product (these would normally be considered as a potential risk).

See also Risks related to use of a medicinal product, Important identified risk and Important potential risk, Missing information, Unexpected adverse reaction

Illegal purposes

See Misuse for illegal purposes

Immunological medicinal product

Any medicinal product consisting of vaccines, toxins, serums or allergen products:

Vaccines, toxins and serums shall cover in particular agents used to produce active immunity (such as cholera vaccine, BCG, polio vaccine, smallpox vaccine), agents used to diagnose the state of immunity (including in particular tuberculin and tuberculin PPD, toxins for the Schick and Dick Tests, brucellin) and agents used to produce passive immunity (such as diphtheria antitoxin, anti-smallpox globulin, antilymphocytic globulin).

Allergen products shall mean any medicinal product which is intended to identify or induce a specific acquired alteration in the immunological response to an allergizing agent.

BCG stands for Bacillus Calmette-Guérin vaccine and PPD for purified protein derivative.

Immunisation

The process of making a person immune.

For the context of Considerations P.I, immunisation refers to the process of making a person immune to an infection.

See also Vaccination

Immunisation anxiety-related reaction

An adverse event following immunisation arising from anxiety about the immunisation (see CIOMS-WHO [63]).

In this definition immunisation means the usage (handling, prescribing and administration) of a vaccine for the purpose of immunising individuals, which in the Arab Countries is preferably referred to as vaccination (in the report of CIOMS/WHO Working Group on Vaccine Pharmacovigilance the terms immunisation and vaccination are used interchangeably).

See also Adverse reaction, Vaccine pharmacovigilance, Vaccination

Immunisation error-related reaction

An adverse event following immunisation that is caused by inappropriate vaccine handling, prescribing or administration and thus by its nature is preventable (see CIOMS-WHO).

In this definition immunisation means the usage (handling, prescribing and administration) of a vaccine for the purpose of immunising individuals (see CIOMS-WHO), which in the Arab Countries is preferably referred to as vaccination (in the report of CIOMS/WHO Working Group on Vaccine Pharmacovigilance the terms immunisation and vaccination are used interchangeably).

Inappropriate refers to usage (handling, prescribing and administration) other than what is licensed and recommended in a given jurisdiction based on scientific evidence or expert recommendations.

See also Adverse reaction, Vaccine pharmacovigilance, Vaccination

Important identified risk and Important potential risk

An identified risk or potential risk that could have an impact on the risk-benefit balance of the product or have implications for public health (see ICH-E2F Guideline.

What constitutes an important risk will depend upon several factors, including the impact on the individual, the seriousness of the risk and the impact on public health. Normally, any risk that is likely to be included in the contraindications or warnings and precautions section of the product information should be considered important (see Annex IV, ICH-E2C(R2) Guideline).

See also Risk-benefit balance, Identified risk, Potential risk, Safety concern

Important potential risk

See Important identified risk and Important potential risk

Incident

A situation where an event occurs or new information arises, irrespective whether this is in the public domain or not, in relation to (an) authorised medicinal product(s) which could have a serious impact on public health.

The incident may be related to quality, efficacy or safety concerns, but most likely to safety and/or quality (and possibly subsequent supply shortages). In addition, situations that do not seem at a first

glance to have a serious impact on public health, but are in the public domain - subject of media attention or not- and may lead to serious public concerns about the product, may also need to be considered as incidents. Likewise, other situations which might have a negative impact on the appropriate use of a medicinal products (e.g. resulting in patients stop taking their medicine) may fall within the definition of an incident.

Individual case safety report (ICSR); synonym: Adverse (drug) reaction report

Format and content for the reporting of one or several suspected adverse reactions to a medicinal product that occur in a single patient at a specific point of time.

In the context of a clinical trial, an individual case is the information provided by a primary source to describe suspected unexpected serious adverse reactions related to the administration of one or more investigational medicinal products to an individual patient at a particular point of time

See also Minimum criteria for reporting

International birth date (IBD)

The date of the first marketing authorisation for any product containing the active substance granted to any company in any country in the world (see Annex IV, ICH-E2C(R2) Guideline).

Investigational drug

Experimental product under study or development. This term is more specific than investigational medicinal product, which includes comparators and placebos (see ICH-E2F Guideline).

See also Investigational medicinal product

Investigational medicinal product

An investigational medicinal product is a pharmaceutical form of an active substance or placebo being tested or used as a reference in a clinical trial, including products already with a marketing authorisation but used or assembled (formulated or packaged) in a way different from the authorised form, or when used for an unauthorised indication, or when used to gain further information about the authorised form. *See also Clinical trial*

Labelling

Information on the immediate or outer packaging.

Medicinal product

Any substance or combination of substances

- presented as having properties for treating or preventing disease in human beings; or
- which may be used in or administered to human beings either with a view to restoring, correcting or modifying physiological functions by exerting a pharmacological, immunological or metabolic action, or to making a medical diagnosis.

Medicinal product derived from human blood or human plasma

Any medicinal product based on blood constituents which is prepared industrially by a public or private establishment, such as a medicinal product including, in particular, albumin, coagulating factor(s) and immunoglobulin(s) of human origin.

Minimum criteria for reporting

For the purpose of reporting cases of suspected adverse reactions, the minimum data elements for a case are: an identifiable reporter, an identifiable patient, an adverse reaction and a suspect medicinal product (see Annex IV, ICH-E2D Guideline).

For the purpose of validation of individual case safety reports as qualifying for reporting in the Arab Countires, see Module VI. *See also Individual case safety report*

Missing information

Gaps in knowledge, related to safety or particular patient populations, which could be clinically significant.

The change of the term in Arab Countries, to name this concept "missing information" rather than "important missing information", is to be clear that in the Arab Country concerned a marketing authorisation cannot be granted if there are unacceptable gaps in knowledge, a marketing authorisation shall be refused if the quality, safety or efficacy are not properly or sufficiently demonstrated.

Misuse of a medicinal product

Situations where the medicinal product is intentionally and inappropriately used not in accordance with the authorised product information.

See also Misuse of a medicinal product for illegal purposes

Misuse of a medicinal product for illegal purposes

Misuse for illegal purposes is misuse with the additional connotation of an intention of misusing the medicinal product to cause an effect in another person. This includes, amongst others: the sale, to other people, of medicines for recreational purposes and use of a medicinal product to facilitate assault. *See also Misuse of a medicinal product*

Name of the medicinal product

The name which may be either an invented name not liable to confusion with the common name, or a common or scientific name accompanied by a trade mark or the name of the marketing authorisation holder.

The common name is the international non-proprietary name (INN) recommended by the World Health Organization, or, if one does not exist, the usual common name.

The complete name of the medicinal product is the name of the medicinal product followed by the strength and pharmaceutical form.

Newly identified signal

In periodic benefit-risk evaluation reports, a signal first identified during the reporting interval, prompting further actions or evaluation (see Annex IV, ICH-E2C(R2) Guideline).

This definition could also apply to a previously closed signal for which new information becomes available in the reporting interval prompting further action or evaluation (see Annex IV, ICH-E2C(R2) Guideline).

This definition is also applicable to periodic safety update reports.

See also Signal, Closed signal

Non-interventional trial; synonym: Non-interventional study

A study where the medicinal product(s) is (are) prescribed in the usual manner in accordance with the terms of the marketing authorisation. The assignment of the patient to a particular therapeutic strategy is not decided in advance by a trial protocol but falls within current practice and the prescription of the medicine is clearly separated from the decision to include the patient in the study. No additional diagnostic or monitoring procedures shall be applied to the patients and epidemiological methods shall be used for the analysis of collected data.

Thus, a trial is non-interventional if the following requirements are cumulatively fulfilled:

- the medicinal product is prescribed in the usual manner in accordance with the terms of the marketing authorisation;
- the assignment of the patient to a particular therapeutic strategy is not decided in advance by a trial protocol but falls within current practice and the prescription of the medicine is clearly separated from the decision to include the patient in the study; and
- no additional diagnostic or monitoring procedures are applied to the patients and epidemiological methods are used for the analysis of collected data.

Non-interventional studies are defined by the methodological approach used and not by the scientific objectives. Non-interventional studies include database research or review of records where all the events of interest have already happened (this may include case-control, cross-sectional, cohort and other study designs making secondary use of data). Non-interventional studies also include those involving primary data collection (e.g. prospective observational studies and registries in which the data collected derive from routine clinical care), provided that the conditions set out above are met. In these studies, interviews, questionnaires and blood samples may be performed as normal clinical practice.

Occupational exposure to a medicinal product

For the purpose of reporting cases of suspected adverse reactions, an exposure to a medicinal product as a result of one's professional or non-professional occupation.

Off-label use

Situations where a medicinal product is intentionally used for a medical purpose not in accordance with the authorised product information.

Off-label use includes use in non-authorised paediatric age categories. Unless specifically requested, it does not include use outside the Arab Country concerned in an indication authorised in that territory which is not authorised in the this Arab country.

Ongoing clinical trial

Trial where enrolment has begun, whether a hold is in place or analysis is complete, but for which a final clinical study report is not available (see ICH-E2F Guideline.

See also Clinical trial, Completed clinical trial

Ongoing signal

In periodic benefit-risk evaluation reports, a signal that remains under evaluation at the data lock point (see Annex IV, ICH-E2C(R2) Guideline).

This definition is also applicable to periodic safety update reports.

See also Signal, Data lock point

Overdose

Administration of a quantity of a medicinal product given per administration or cumulatively which is above the maximum recommended dose according to the authorised product information. Clinical judgement should always be applied.

Package leaflet

A leaflet containing information for the user which accompanies the medicinal product.

Periodic safety update report (PSUR)

Format and content for providing an evaluation of the risk-benefit balance of a medicinal product for submission by the marketing authorisation holder at defined time points during the post-authorisation phase.

In the Arab Countries, periodic safety update reports should follow the format described in Module VII.

Pharmacovigilance

Science and activities relating to the detection, assessment, understanding and prevention of adverse effects or any other medicine-related problem (see WHO).

In line with this general definition, underlying objectives of pharmacovigilance in accordance with the applicable legislation for are:

- preventing harm from adverse reactions in humans arising from the use of authorised medicinal products within or outside the terms of marketing authorisation or from occupational exposure; and
- promoting the safe and effective use of medicinal products, in particular through providing timely information about the safety of medicinal products to patients, healthcare professionals and the public.

Pharmacovigilance is therefore an activity contributing to the protection of patients' and public health.

Pharmacovigilance system

A system used by the marketing authorisation holder and by national medicines authoritites to fulfil the pharmacovigilance tasks and responsibilities listed in national regulations and designed to monitor the safety of authorised medicinal products and detect any change to their risk-benefit balance.

In general, a pharmacovigilance system is a system used by an organisation to fulfil its legal tasks and responsibilities in relation to pharmacovigilance and designed to monitor the safety of authorised medicinal products and detect any change to their risk-benefit balance.

Pharmacovigilance system master file (PSMF)

A detailed description of the pharmacovigilance system used by the marketing authorisation holder with respect to one or more authorised medicinal products.

See also Pharmacovigilance system

Post-authorisation safety study (PASS)

Any study relating to an authorised medicinal product conducted with the aim of identifying, characterising or quantifying a safety hazard, confirming the safety profile of the medicinal product, or of measuring the effectiveness of risk management measures.

A post-authorisation safety study may be an interventional clinical trial or may follow an observational, non-interventional study design.

See also Clinical trial, Non-interventional trial

Potential risk

An untoward occurrence for which there is some basis for suspicion of an association with the

medicinal product of interest but where this association has not been confirmed (see ICH-E2F Guideline.

Examples include:

- non-clinical toxicological findings that have not been observed or resolved in clinical studies;
- adverse events observed in clinical trials or epidemiological studies for which the magnitude of the difference, compared with the comparator group (placebo or active substance, or unexposed group), on the parameter of interest raises a suspicion of, but is not large enough to suggest, a causal relationship;
- a signal arising from a spontaneous adverse reaction reporting system;
- an event known to be associated with other active substances within the same class or which could be expected to occur based on the properties of the medicinal product (see ICH-E2F Guideline).

See also Adverse event, Signal

Quality adherence

Carrying out tasks and responsibilities in accordance with quality requirements.

See also Quality requirements

Quality assurance

See Quality control and assurance

Quality control and assurance

Monitoring and evaluating how effectively the structures and processes have been established and how effectively the processes are being carried out.

This applies for the purpose of fulfilling quality requirements.

See also Quality requirements

Quality improvements

Correcting and improving the structures and processes where necessary.

This applies for the purpose of fulfilling quality requirements.

See also Quality requirements

Quality of a pharmacovigilance system

All characteristics of the pharmacovigilance system which are considered to produce, according to estimated likelihoods, outcomes relevant to the objectives of pharmacovigilance.

See also Pharmacovigilance system, Quality system of a pharmacovigilance system

Quality objectives

See Quality requirements

Quality planning

Establishing structures and planning integrated and consistent processes.

This applies for the purpose of fulfilling quality requirements.

See also Quality requirements

Quality requirements

Those characteristics of a system that are likely to produce the desired outcome, or quality objectives.

See also Pharmacovigilance system, Quality system of a pharmacovigilance system

Quality system of a pharmacovigilance system

The organisational structure, responsibilities, procedures, processes and resources of the pharmacovigilance system as well as appropriate resource management, compliance management and record management.

The quality system is part of the pharmacovigilance system.

See also Pharmacovigilance system, Quality of a pharmacovigilance system

Reference safety information

In periodic benefit-risk evaluation reports for medicinal products, all relevant safety information contained in the reference product information (e.g. the company core data sheet) prepared by the marketing authorisation holder and which the marketing authorisation holder requires to be listed in all countries where it markets the product, except when the local regulatory authority specifically requires a modification (see Annex IV, ICH-E2C(R2) Guideline).

It is a subset of information contained within the marketing authorisation holder's reference product information for the periodic benefit-risk evaluation report. Where the reference product information is the company core data sheet, the reference safety information is the company core safety information (see Annex IV, ICH-E2C(R2) Guideline).

See also Company core data sheet, Company core safety information

Registry

An organised system that uses observational methods to collect uniform data on specified outcomes in a population defined by a particular disease, condition or exposure.

Risk-benefit balance

An evaluation of the positive therapeutic effects of the medicinal product in relation to the risks, i.e. any risk relating to the quality, safety or efficacy of the medicinal product as regards patients' health or public health.

See also Risks related to use of a medicinal product

Risk management plan (RMP)

A detailed description of the risk management system.

To this end, it must identify or characterise the safety profile of the medicinal product(s) concerned, indicate how to characterise further the safety profile of the medicinal product(s) concerned, document measures to prevent or minimise the risks associated with the medicinal product, including an assessment of the effectiveness of those interventions and document post-authorisation obligations that have been imposed as a condition of the marketing authorisation.

See also Risk management system, Risk minimisation activity

Risk management system

A set of pharmacovigilance activities and interventions designed to identify, characterise, prevent or minimise risks relating to a medicinal product, including the assessment of the effectiveness of those interventions.

Risk minimisation activity; synonym: Risk minimisation measure

An intervention intended to prevent or reduce the probability of the occurrence of an adverse reaction associated with the exposure to a medicine, or to reduce its severity should it occur.

These activities may consist of routine risk minimisation (e.g. product information) or additional risk minimisation activities (e.g. healthcare professional or patient communications/educational materials).

Risks related to use of a medicinal product

Any risk relating to the quality, safety or efficacy of the medicinal product as regards patients' health or public health and any risk of undesirable effects on the environment.

Safety concern

An important identified risk, important potential risk or missing information.

It is noted that the ICH definition of safety concern is: an important identified risk, important potential risk or important missing information, i.e. includes the qualifier "important" in relation to missing information (see Annex IV, ICH-E2C(R2) Guideline). The ICH-E2E Guideline (see Annex IV) uses the terms safety issue and safety concern interchangeably with the same definition for safety concern as defined in the ICH-E2C(R2) Guideline.

See also Important identified risk and Important potential risk, Missing information

Serious adverse reaction

An adverse reaction which results in death, is life-threatening, requires in-patient hospitalisation or prolongation of existing hospitalisation, results in persistent or significant disability or incapacity, or is a congenital anomaly/birth defect.

Life-threatening in this context refers to a reaction in which the patient was at risk of death at the time of the reaction; it does not refer to a reaction that hypothetically might have caused death if more severe (see Annex IV, ICH-E2D Guideline).

Medical and scientific judgement should be exercised in deciding whether other situations should be considered serious reactions, such as important medical events that might not be immediately life threatening or result in death or hospitalisation but might jeopardise the patient or might require intervention to prevent one of the other outcomes listed above. Examples of such events are intensive treatment in an emergency room or at home for allergic bronchospasm, blood dyscrasias or convulsions that do not result in hospitalisation or development of dependency or abuse (see Annex IV, ICH-E2D Guideline).

Any suspected transmission via a medicinal product of an infectious agent is also considered a serious adverse reaction.

See also Adverse reaction

Signal

Information arising from one or multiple sources, including observations and experiments, which suggests a new potentially causal association, or a new aspect of a known association between an intervention and an event or set of related events, either adverse or beneficial, that is judged to be of sufficient likelihood to justify verificatory action.

For the purpose of Section 16.2 of the periodic benefit-risk evaluation report, signals relate to adverse effects (see Annex IV, ICH-E2C(R2) Guideline).

See also Validated signal, Newly identified signal, Closed signal, Ongoing signal, Signal management process, Adverse reaction

Signal management process

Includes the following activities: signal detection, signal validation, signal confirmation, signal analysis and prioritisation, signal assessment and recommendation for action.

It therefore is a set of activities performed to determine whether, based on an examination of individual case safety reports (ICSRs), aggregated data from active surveillance systems or studies, literature information or other data sources, there are new risks causally associated with an active substance or a medicinal product or whether known risks have changed.

See also Signal validation

Signal validation

Process of evaluating the data supporting a detected signal in order to verify that the available documentation contains sufficient evidence demonstrating the existence of a new potentially causal association, or a new aspect of a known association, and therefore justifies further analysis of the signal.

See also Validated signal

Solicited sources of individual case safety reports

Organised data collection systems, which include clinical trials, registries, post-authorisation named-patients use programmes, other patient support and disease management programmes, surveys of patients or healthcare providers or information gathering on efficacy or patient compliance. For the purpose of safety reporting, solicited reports should not be considered spontaneous but classified as individual case safety reports from studies and therefore should have an appropriate causality assessment by a healthcare professional or the marketing authorisation holder (see Annex IV, ICH-E2D).

See also Clinical trial, Post-authorisation safety study, Non-interventional trial

Spontaneous report, synonym: Spontaneous notification

An unsolicited communication by a healthcare professional or consumer to a company, regulatory authority or other organisation (e.g. the World Health Organization, a regional centre, a poison control centre) that describes one or more adverse reactions in a patient who was given one or more medicinal products and that does not derive from a study or any organised data collection scheme (see Annex IV, ICH-E2D).

In this context, an adverse reaction refers to a suspected adverse reaction.

Stimulated reporting can occur in certain situations, such as after a direct healthcare professional communication (DHPC), a publication in the press or questioning of healthcare professionals by company representatives, and adverse reaction reports arising from these situations are considered spontaneous reports (see Annex IV, ICH-E2D), provided the report meets the definition above. Reporting can also be stimulated by invitation from patients' or consumers' organisations to their members. Reporting made in the context of early post-marketing phase vigilance (EPPV), e.g. in Japan, is also considered stimulated reporting.

See also Adverse reaction

Stimulated reporting

See Spontaneous report

Substance

Any matter irrespective of origin which may be human (e.g. human blood and human blood products), animal (e.g. micro-organisms, whole animals, parts of organs, animal secretions, toxins,

extracts, blood products), vegetable (e.g. micro-organisms, plants, part of plants, vegetable secretions, extracts), chemical (e.g. elements, naturally occurring chemical materials and chemical products obtained by chemical change or synthesis).

Summary of product characteristics (SmPC)

Part of the marketing authorisation of a medicinal product setting out the agreed position of the product as distilled during the course of the assessment process which includes the information described in the national regulations. It is the basis of information for healthcare professionals on how to use the product safely and effectively. The package leaflet is drawn in accordance with the summary of product characteristics (based on A Guideline on Summary of Product Characteristics, Volume 2C of the Rules Governing Medicinal Products in the EU, which is acknowledged in the Arab Countries).

Target population (treatment); synonym: Treatment target population

The patients who might be treated with the medicinal product in accordance with the indication(s) and contraindications in the authorised product information.

Target population (vaccine); synonym: Vaccine target population

Persons who might be vaccinated in accordance with the indication(s) and contraindications in the authorised product information and official recommendations for vaccinations.

Traditional herbal medicinal product

A herbal medicinal product that fulfils the conditions i.e.

(a) it has (an)indication(s) exclusively appropriate to traditional herbal medicinal products which, by virtue of their composition and purpose, are intended and designed for use without the supervision of a medical practitioner for diagnostic purposes or for prescription or monitoring of treatment;

(b) it is exclusively for administration in accordance with a specified strength and posology;

(c) it is an oral, external and/or inhalation preparation;

(d) the period of traditional use has elapsed;

(e) the data on the traditional use of the medicinal product are sufficient; in particular the product proves not to be harmful in the specified conditions of use and the pharmacological effects or efficacy of the medicinal product are plausible on the basis of long-standing use and experience.

Regarding (d), the product must have been in medicinal use throughout a period of at least 30 years, including at least 15 years within the Arab Country concerned.

See also Herbal medicinal product

Unexpected adverse reaction

An adverse reaction, the nature, severity or outcome of which is not consistent with the summary of product characteristics[64].

This includes class-related reactions which are mentioned in the summary of product characteristics (SmPC) but which are not specifically described as occurring with this product. For products authorised nationally, the relevant SmPC is that authorised by the national medicines authority in the Arab Country to whom the reaction is being reported.

See also Summary of product characteristics

Upper management

Group of persons in charge of the highest executive management of an organisation. Membership of this group is determined by the governance structure of the organisation. While it is envisaged that the upper management usually is a group, the head of the organisation is the one person at the top of the organisation with ultimate responsibility for ensuring that the organisation complies with relevant legislation.

Vaccination

The administration of a vaccine with the aim to produce immune response.

See also Immunisation

Vaccination failure

Vaccination failure due to actual vaccine failure or failure to vaccinate (see CIOMS-WHO [63]).

Vaccination failure may be defined based on clinical endpoints or immunological criteria, where correlates or surrogate markers for disease protection exist. Primary failure (e.g. lack of seroconversion or seroprotection) needs to be distinguished from secondary failure (waning immunity) (see CIOMS-WHO [63]).

See also Vaccine failure, Failure to vaccinate

Vaccine

See Immunological medicinal product

Vaccine failure

Confirmed or suspected vaccine failure.

[64] For investigational medicinal products, an unexpected adverse reaction is an adverse reaction, the nature or severity of which is not consistent with the applicable product information (e.g. the investigator's brochure for an unauthorised investigational product or the summary of product characteristics for an authorised product).

Confirmed clinical vaccine failure

Occurrence of the specific vaccine-preventable disease in a person who is appropriately and fully vaccinated taking into account the incubation period and the normal delay for the protection to be acquired as a result of immunisation (see CIOMS-WHO).

Suspected clinical vaccine failure

Occurrence of disease in an appropriately and fully vaccinated person, but the disease is not confirmed to be the specific vaccine-preventable disease, e.g. disease of unknown serotype in a fully vaccinated person (based on CIOMS-WHO).

Confirmed immunological vaccine failure

Failure of the vaccinated person to develop the accepted marker of protective immune response after being fully and appropriately vaccinated, as demonstrated by having tested or examined the vaccinated person at an appropriate time interval after completion of immunisation (based on CIOMS-WHO).

Suspected immunological vaccine failure

Failure of the vaccinated person to develop the accepted marker of protective immune response after being fully and appropriately vaccinated, but with the testing or examination of the vaccinated person done at an inappropriate time interval after completion of immunisation (based on CIOMS-WHO). For interpreting what means appropriately vaccinated, consider the explanatory note for Immunisation error-related reaction.

See also Vaccination failure

Vaccine pharmacovigilance

The science and activities relating to the detection, assessment, understanding and communication of adverse events following immunisation and other vaccine- or immunisation-related issues, and to the prevention of untoward effects of the vaccine or immunisation (see CIOMS-WHO [63]).

In this definition, immunisation means the usage of a vaccine for the purpose of immunising individuals (see CIOMS-WHO [63]), which in the Arab Countries is preferably referred to as vaccination (in the report of CIOMS/WHO Working Group on Vaccine Pharmacovigilance the terms immunisation and vaccination are used interchangeably). Usage includes all processes that occur after a vaccine product has left the manufacturing/packaging site, i.e. handling, prescribing and administration of the vaccine (see CIOMS-WHO [63]).

An adverse event following immunisation (AEFI) is any untoward medical occurrence which follows immunisation and which does not necessarily have a causal relationship with the usage of the vaccine. The adverse event may be any unfavourable or unintended sign, abnormal laboratory finding, symptom or disease. While this AEFI definition is compatible with the definition of adverse event applied in the Arab Countries, the AEFI definition is not needed to describe pharmacovigilance for vaccines in the Arab Countries. However, Arab Countries guidance on pharmacovigilance for vaccines makes use of the terminology suggested by CIOMS-WHO regarding possible causes of adverse events, turning them into suspected adverse reactions. A coincidental event is an AEFI that is caused by something other than the vaccine product,

immunisation error or immunisation anxiety (see CIOMS-WHO [63]).

See also Adverse event, Immunisation anxiety-related reaction, Immunisation error-related reaction, Vaccine product-related reaction, Vaccine quality defect-related reaction, Vaccination

Vaccine product-related reaction

An adverse event following immunisation that is caused or precipitated by a vaccine due to one or more of the inherent properties of the vaccine product (see CIOMS-WHO).

In this definition immunisation means the usage (handling, prescribing and administration) of a vaccine for the purpose of immunising individuals (see CIOMS-WHO), which in the Arab Countries is preferably referred to as vaccination (in the report of CIOMS/WHO Working Group on Vaccine Pharmacovigilance the terms immunisation and vaccination are used interchangeably [63]).

See also Adverse reaction, Vaccine pharmacovigilance

Vaccine quality defect-related reaction

An adverse event following immunisation that is caused or precipitated by a vaccine that is due to one or more quality defects of the vaccine product including its administration device as provided by the manufacturer (see CIOMS-WHO [63]).

In this definition immunisation means the usage (handling, prescribing and administration) of a vaccine for the purpose of immunising individuals (see CIOMS-WHO), which in the Arab Countries is preferably referred to as vaccination (in the report of CIOMS/WHO Working Group on Vaccine Pharmacovigilance the terms immunisation and vaccination are used interchangeably [63]).

For the purpose of this definition, a vaccine quality defect is defined as any deviation of the vaccine product as manufactured from its set quality specifications (see CIOMS-WHO).

See also Adverse reaction, Vaccine pharmacovigilance

Valid individual case safety report

See Individual case safety report

Validated signal

A signal where the signal validation process of evaluating the data supporting the detected signal has verified that the available documentation contains sufficient evidence demonstrating the existence of a new potentially causal association, or a new aspect of a known association, and therefore justifies further analysis of the signal.

See also Signal

GVP: Annexes

Annex II – Templates

Annex II.1. Template of the Risk Management Plan (RMP) in the Arab Countries in integrated format (Rev.1)

Active substance(s) (INN or common name):	
Pharmaco-therapeutic group (ATC Code):	
Name of Marketing Authorisation Holder or Applicant:	
Name of the pharmacovigilance representative (if applicable)	
Number of medicinal products to which this RMP refers:	Choose one of the following: 1 2 3 4 5 6
Product(s) concerned (brand name(s)):	<list>

Data lock point for this RMP	<Enter a date>	Version number	<Enter a version no>
Date of final sign off	<Enter a date>		

RMP table of content

Provide here the table of content of the integrated RMP and its annexes (hyperlink) showing the page number

Part I: Product(s) Overview .....

Part II: Module SI - Epidemiology of the indication(s) and target population .....

SI.1 Epidemiology of the disease .....

SI.2 Concomitant medication(s) in the target population .....

SI.3 Important co-morbidities found in the target population .....

Part II: Module SII - Non-clinical part of the safety specification .....

Part II: Module SIII - Clinical trial exposure .....

SIII.1 Brief overview of development .....

SIII.2 Clinical Trial exposure .....

Part II: Module SIV - Populations not studied in clinical trials .....

SIV.1 Limitations of adr detection common to clinical trial development programmes .....

SIV.2 Effect of exclusion criteria in the clinical trial development plan .....

SIV.3 Limitations in respect to populations typically under-represented in clinical trial development programmes .....

SIV.4 Conclusions on the populations not-studied and other limitations of the clinical trial development programme .....

Part II: Module SV - Post-authorisation experience .....

SV.1 Action taken by regulatory authorities and/or marketing authorisation holders for safety reasons .....

SV.2 Non-study post-authorisation exposure .....

SV.2.1 Method used to calculate exposure .....

SV.2.2 Exposure .....

SV.3 Post-authorisation use in special populations not studied in clinical trials .....

SV.4 Post-authorisation off-label use .....

SV.5 Epidemiological study exposure .....

Part II: Module SVI - Additional requirements for the safety specification .....

SVI.1 Potential for harm from overdose .....

SVI.2 Potential for transmission of infectious agents .....

SVI.3 Potential for misuse for illegal purposes .....

SVI.4 Potential for medication errors .....

SVI.4.1 Description of medication errors during the clinical trial programme .....

SVI.4.2 Preventive measures for the final product(s) being marketed .....

SVI.4.3 Effect of device failure .....

SVI.4.4 Reports of medication errors with the marketed product(s) .....

SVI.5 Potential for off-label use .....
SVI.6 Specific Paediatric issues .....
SVI.6.1 Issues identified in paediatric investigation plans .....
SVI.6.2 Potential for paediatric off-label use .....
SVI.7 Conclusions .....

Part II: Module SVII - Identified and potential risks .....

SVII.1 Newly identified safety concerns (since this module was last submitted) .....
SVII.2 Recent study reports with implications for safety concerns .....
SVII.3 Details of important identified and potential risks from clinical development and post-authorisation experience (including newly identified) .....
SVII.4 Identified and potential interactions .....
SVII.4.1 Overview of potential for interactions .....
SVII.4.2 Important identified and potential interactions .....
SVII.5 Pharmacological class effects .....
SVII.5.1 Pharmacological class risks already included as important identified or potential risks .....
SVII.5.2 Important pharmacological class effects not discussed above .....

Part II: Module SVIII - Summary of the safety concerns .....

Part III: Pharmacovigilance Plan .....

III.1 Safety concerns and overview of planned pharmacovigilance actions .....
III.2 Additional pharmacovigilance activities to assess effectiveness of risk minimisation measures .
III.3 Studies and other activities completed since last update of Pharmacovigilance Plan .....
III.4 Details of outstanding additional pharmacovigilance activities .....
III.5 Summary of the Pharmacovigilance Plan .....
III.5.1 Table of on-going and planned additional PhV studies/activities in the Pharmacovigilance (development) Plan .....
III.5.2 Table of completed studies/activities from the Pharmacovigilance Plan .....

Part IV: Plans for post-authorisation efficacy studies .....

IV.1 Applicability of efficacy to all patients in the target population .....
IV.2 Tables of post-authorisation efficacy studies .....
IV.3 Summary of post authorisation efficacy development plan .....
IV.4 Summary of completed post authorisation efficacy studies .....

Part V: Risk minimisation measures .....

V.1 Risk minimisation measures by safety concern .....
V.2 Risk minimisation measure failure (if applicable) .....
V.2.1 Analysis of risk minimisation measure(s) failure .....
V.2.2 Revised proposal for risk minimisation .....
V.3 Summary table of risk minimisation measures .....

Part VI: Summary of the risk management plan by product .....

VI.1 Summary of Safety concerns .....

VI.2 Summary of Risk minimisation measures by safety concern .....

VI.3 Planned Post authorisation development plan .....

VI.4 Summary of changes to the Risk Management Plan over time .....

Part VII: RMP Annexes .....

RMP Annex 1 – "National Pharmacovigilance and Safety reports database" /"National Pharmacovigilance Issues Tracking Tool" Interface .....

RMP Annex 2 - SmPC & Package Leaflet .....

RMP Annex 3 - Worldwide marketing authorisation by country (including Arab Country(s) concerned) .....

RMP Annex 4 - Synopsis of on-going and completed clinical trial programme .....

RMP Annex 5 - Synopsis of on-going and completed pharmacoepidemiological study programme .....

RMP Annex 6 - Protocols for proposed and on-going studies in the section "Summary table of additional pharmacovigilance activities" in RMP part III .....

RMP Annex 7 - Specific adverse event follow-up forms .....

RMP Annex 8 - Protocols for proposed and on-going studies in RMP part IV .....

RMP Annex 9 - Newly available study reports for RMP parts III & IV .....

RMP Annex 10 - Details of proposed additional risk minimisation measures (if applicable) .....

RMP Annex 11 - Mock-up of proposed additional risk minimisation measures (if applicable) .....

RMP Annex 12 - Other supporting data (including referenced material) .....

Part I: Product(s) Overview

Administrative information on the RMP

Part	**Module/annex**	**Date last updated for submission (sign off date)**	***Version number of RMP when last submitted**
Part II Safety Specification	SI Epidemiology of the indication and target population(s)	<Enter a date>	
	SII Non-clinical part of the safety specification	<Enter a date>	
	SIII Clinical trial exposure	<Enter a date>	
	SIV Populations not studied in clinical trials	<Enter a date>	
	SV Post-authorisation experience	<Enter a date>	
	SVI Additional requirements for the safety specification	<Enter a date>	
	SVII Identified and potential risks	<Enter a date>	
	SVIII Summary of the safety concerns	<Enter a date>	
Part III Pharmacovigilance Plan		<Enter a date>	
Part IV Plan for post-authorisation efficacy studies		<Enter a date>	
Part V Risk Minimisation Measures		<Enter a date>	
Part VI Summary of RMP		<Enter a date>	
Part VII Annexes	ANNEX 2 Current or proposed SmPC/PIL	<Enter a date>	
	ANNEX 3 Worldwide marketing status by country	<Enter a date>	
	ANNEX 4 Synopsis of clinical trial programme	<Enter a date>	

Part	Module/annex	Date last updated for submission (sign off date)	*Version number of RMP when last submitted
	ANNEX 5 Synopsis of pharmacoepidemiological study programme	<Enter a date>	
	ANNEX 6 Protocols for proposed and on-going studies in Part III	<Enter a date>	
	ANNEX 7 Specific adverse event follow-up forms	<Enter a date>	
	ANNEX 8 Protocols for studies in Part IV	<Enter a date>	
	ANNEX 9 Synopsis of newly available study reports in Parts III-IV	<Enter a date>	
	ANNEX 10 Details of proposed additional risk minimisation activities	<Enter a date>	
	ANNEX 11 Mock up examples	<Enter a date>	
	ANNEX 12 Other supporting data	<Enter a date>	

** A new RMP version number should be assigned each time any Parts/modules are updated*

QPPV name .. ……

QPPV signature .....……...……

Contact person for this RMP ……

E-mail address or telephone number of contact person ……

…….....

There can only ever be ONE agreed RMP for a product or products. Wherever possible there should only be one additional submitted RMP version under evaluation. To facilitate this, MAHs are reminded that where possible "routine" updates of a RMP (if applicable) should NOT be submitted when there is already a version of a RMP being evaluated as part of an on-going procedure. A cover letter should be submitted instead stating that there is no change to the RMP version xx dated yy submitted as part of procedure.

Where a procedure would normally require the submission of an updated RMP as part of the dossier, but there is already another version under evaluation because of another procedure, it is also possible to submit a letter as stated above.

In some circumstances there may be a need to submit a third RMP which is a different version from both the agreed RMP and a second RMP version currently undergoing evaluation e.g. if new safety concerns have been recently identified or if a new indication requires different risk minimisation measures. In this case different versions of a RMP will be simultaneously under evaluation. The purpose of this section is to provide oversight.

Overview of versions:

Version number of last agreed RMP:

Version number	<Enter a version no>
Agreed within	<Indicate procedure>

Current RMP versions under evaluation:

RMP Version number	**Submitted on**	**Submitted within**
<Insert number>	<Enter a date>	<indicate procedure >
… etc.		

For each product in the RMP

Invented name(s) in the Arab Country concerned	
Brief description of the product including: • chemical class • summary of mode of action • important information about its composition (e.g. origin of active substance of biological, relevant adjuvants or residues for vaccines	
Indication(s)	Current (if applicable) **in the Arab Country concerned**
	Current of the reference medicinal product/this product in the EEA
	Proposed (if applicable) **in the Arab Country concerned**
	That of the reference medicinal product/ this product in the EEA
Posology and route of administration in the Arab Country concerned	Current (if applicable) **in the Arab Country concerned**
	Current of the reference medicinal product/ this product in the EEA
	Proposed (if applicable) **in the Arab Country concerned**
	That of the reference medicinal product/ this product in the EEA
Pharmaceutical form(s) and strengths	Current (if applicable) **in the Arab Country concerned**
	Current of the reference medicinal product/ this product in the EEA
	Proposed (if applicable) **in the Arab Country concerned**

	That of the reference medicinal product/ this product in the EEA

Country and date of first authorisation worldwide	<Enter a country> <Enter a date>
Country and date of first launch worldwide	<Enter a country> <Enter a date>

Date of first authorisation (if authorised) in the Arab Country concerned

<Enter a date>

Is the product subject to additional monitoring[65]? Yes ☐ No ☐

[65]This is a European system which is adopted by the Arab Countries unless otherwise announced by the national medicines authority(s). For more information on additional monitoring see GVP in Arab Countries Module X: additional monitoring.
The list of medicines under additional monitoring includes medicines authorised in the European Union (EU) that are being monitored particularly closely by regulatory authorities. Medicines under additional monitoring have a black inverted triangle displayed in their package leaflet and summary of product characteristics, together with a short sentence explaining what the triangle means.

Part II: Module SI - Epidemiology of the indication(s) and target population

This should normally be completed for each indication. If a medicine has an indication for both prevention and treatment of the same disease (e.g. malaria) or for one disease but used in combination with different other therapies (oncology), it may be appropriate to include the "linked" indications together.

If the indication targets a subpopulation of those with the disease, provide the information for the target population as well as the disease as a whole e.g. patients with metastatic breast cancer who have failed one or more prior treatment.

If a disease can target both sexes, despite being predominately in one, information should be provided for both – e.g. breast cancer –unless it is a medicine contraindicated in one sex.

Indication

Brand names of concerned products (with this indication)

SI.1 Epidemiology of the disease

This may discuss inter-regional (e.g. Africa, Asia, EU, US, etc.) variations but have a prime focus on the Arab Country concerned.

- Incidence and prevalence
- Demographics of the target population – age, sex, race/ethnic origin.
- Risk factors for the disease
- Main treatment options
- Mortality and morbidity (natural history)

SI.2 Concomitant medication(s) in the target population

Discuss other medications frequently used with the medicinal product either to treat the disease or complications of it (e.g. anti-hypertensives will frequently be used alongside hypoglycaemic medication in the treatment of diabetes; some oncology products are always used in combination etc.).

SI.3 Important co-morbidities found in the target population

Provide incidence, prevalence and mortality. If the incidence of a co-morbid disease commonly found in the target population is increased compared with the incidence in the general population of the same age/sex as a result of the disease itself, this should be specifically discussed (e.g. for a medicinal product to treat rheumatoid arthritis, the incidence of coronary heart disease is increased in people with rheumatoid arthritis compared with that seen in patients without RA of the same age and sex)

Part II: Module SII - Non-clinical part of the safety specification

This module should present a summary of the important non-clinical safety findings. Where studies have "negative" findings, these should be mentioned if of relevance to the target population (e.g. negative reproductive toxicity). The topics should normally include, but do not need to be limited to:

Key Safety findings (from non- clinical studies)	**Relevance to human usage**
Toxicity including: • Single and repeat-dose toxicity, • reproductive (must be discussed if medicine might be used in women of child-bearing potential) • developmental toxicity • nephrotoxicity • hepatotoxicity • genotoxicity • carcinogenicity	
General safety pharmacology: • cardiovascular (including potential for QT interval prolongation) • nervous system • etc.	
Mechanisms for drug interactions	
Other toxicity-related information or data	

Specify whether there is a need for additional non-clinical data if the medicinal product(s) is/are to be used in special populations

SII Conclusions on non-clinical data

List of safety concerns from non-clinical data that have:

- been confirmed by clinical data
- have not been adequately refuted by clinical data
- which are of unknown significance
- or where further research needed

Safety concerns
Important identified risks (confirmed by clinical data)
Important potential risks (not refuted by clinical data or which are of unknown significance)
Missing information

These safety concerns should be carried forward to Part II Module SVIII.

Part II: Module SIII - Clinical trial exposure

SIII.1 Brief overview of development

Provide details of how the authorised indications and target populations have developed during the lifecycle for the product(s) within this RMP. This should include:

- Original indication /product name(s)
- New populations e.g. extensions of indications/ new products
- Any other significant developments – e.g. route of administration

SIII.2 Clinical Trial exposure

The following tables should be provided for each indication with a summary table showing total exposure.

Provide each table, where available, based on exposed (to medicinal product of interest) persons in:

- randomised, blinded trial population only
- all clinical trial populations (including open extension)

*Data should be pooled and **NOT** shown per trial unless there are clear, justified reasons (to be provided) why some data should not be amalgamated. When the reason for providing an updated RMP is a new population (either extension of indication or a new product with the same active substance) or a new strength or formulation, the new data should be presented separately first, as well as being included in the "total" tables.*

Data should be provided in an appropriate format – either in a table or graphically. The categories below are suggestions and tables/graphs should be tailored to the product. When patients have been enrolled in more than one trial (e.g. open label extension study following a trial) they should only be included once in the age/sex/ethnic original tables. Where differences in the total numbers of patients arise between tables, the tables should be annotated to reflect the reasons for the discrepancy.

If there is only one indication, tables 2, 4, 7, 9 and 11 do not need to be provided. Similarly table 6 need not be provided if only one product in the RMP.

Table 1: Duration of exposure (by indication)		
Indication 1(person time should only be provided for final duration category and total)		
Duration of exposure (at least)	Persons	Person time
1 m		
3 m		
6 m		
12 m etc.		
Total person time		

Table 1: Duration of exposure (by indication)		
Indication 2 (person time should only be provided for final duration category and total)		
Duration of exposure (at least)	Persons	Person time
1 m		
3 m		
6 m		
12 m etc.		
Total person time		

Table 2: Duration of exposure (totals)		
Total exposed population (person time should only be provided for final duration category and total)		
Duration of exposure (at least)	Persons	Person time
1 m		
3 m		
6 m		
12 m etc.		
Total person time		

Table 3: By dose (by indication)		
Indication 1		
Dose of exposure	Persons	Person time
Dose level 1		
Dose level 2 etc.		
Total		
Indication 2		
Dose of exposure	Persons	Person time
Dose level 1		
Dose level 2 etc.		
Total		

Table 4: By dose (totals)		
Total Population		
Dose of exposure	Persons	Person time
Dose level 1		
Dose level 2 etc.		
Total		

When providing data by age group, the age group should be relevant to the target population. Artificial categories such as <65, >65 should be avoided. Paediatric data should be divided by categories (e.g. ICH-E11) similarly the data on mature patients should be stratified into categories such as 65-74, 75-84 and 85+ years. For teratogenic drugs, stratification into age categories related to childbearing potential might be appropriate for the female population. If the RMP includes more than one medicinal product, the total population table should be provided for each product as well as a combined table.

Table 5: By age group and gender (by indication)				
Indication 1				
Age group	Persons		Person time	
	M	F	M	F
Age group 1				
Age group 2 etc.				
Total				
Indication 2				
Age group	Persons		Person time	
	M	F	M	F
Age group 1				
Age group 2 etc.				
Total				

Table 6: By age group and gender (by product)				
Total population by medicinal product 1				
Age group	Persons		Person time	
	M	F	M	F
Age group 1				
Age group 2 etc.				
Total				
Total population by medicinal product 2				
Age group	Persons		Person time	
	M	F	M	F
Age group 1				
Age group 2 etc.				
Total				

Table 7: By age group and gender (totals)				
Total population				
Age group	Persons		Person time	
	M	F	M	F
Age group 1				
Age group 2 etc.				
Total				

Table 8: By ethnic or racial origin (by indication)		
Indication 1		
Ethnic/racial origin	Persons	Person time
Ethnic origin 1		
Ethnic origin 2 etc.		
Total		
Indication 2		
Ethnic/racial origin	Persons	Person time
Ethnic origin 1		
Ethnic origin 2 etc.		
Total		

Table 9: By ethnic or racial origin (totals)		
Total population		
Ethnic/racial origin	Persons	Person time
Ethnic origin 1		
Ethnic origin 2 etc.		
Total		

Table 10: Special populations (by indication)		
Indication 1		
	Persons	Person time
Pregnant women		
Lactating women		
Renal impairment (specify or categorise)		
Hepatic impairment (specify or categorise)		
Cardiac impairment (specify or categorise)		
Sub populations with genetic polymorphism (specify)		
Immuno-compromised		
Indication 2		
	Persons	Person time
Pregnant women		
Lactating women		
Renal impairment (specify or categorise)		
Hepatic impairment (specify or categorise)		
Cardiac impairment (specify or categorise)		
Sub populations with genetic polymorphism (specify)		
Immuno-compromised		

Table 11: Special populations (totals)		
Total population		
	Persons	Person time
Pregnant women		
Lactating women		
Renal impairment (specify or categorise)		
Hepatic impairment (specify or categorise)		
Cardiac impairment (specify or categorise)		
Sub populations with genetic polymorphism (specify)		
Immuno-compromised		

Part II: Module SIV - Populations not studied in clinical trials

This module should discuss the limitations of the clinical trial population in relation to predicting the safety of the medicinal product(s) in the market place. The titles in SIV.3 below are suggestions and the discussion should be tailored to the medicinal product and its intended use and so may include other categories where there has been limited or no research. Limitations may also arise due to use in a different setting.

SIV.1 Limitations of ADR detection common to clinical trial development programmes

Clinical trial development programmes are unlikely to detect the following types of adverse reactions due to well-known inherent limitations. Based on the number of patients exposed, the duration of patient exposure, total dose of medicine, action of medicine etc., discuss what could have been detected.

Ability to detect adverse reactions	**Limitation of trial programme**	**Discussion of implications for target population**
Which are rare (it may be appropriate to choose other ADR frequencies)	<E.g. 12,600 patients were exposed over the whole CT programme>	<E.g. ADRS with a frequency greater than 1 in 4,200 could be detected if there were no background incidence>
Due to prolonged exposure	<E.g. 3000 women were exposed to X for more than 4 years during which time there were no cases of endometrial carcinoma. 42 women in the treated experienced endometrial hyperplasia compared with 35 in the non-exposed group (2000)>	<E.g. There does not appear to be an effect on endometrial proliferation during the first 4 years of treatment. X is thought to ……etc.>
Due to cumulative effects	<e.g. specific organ toxicity>	
Which have a long latency		

SIV.2 Effect of exclusion criteria in the clinical trial development plan

Discuss the main exclusion criteria across the clinical trial development programme. (This should not be a list of exclusion criteria by trial but a discussion on the effect of exclusion criteria across the clinical trial programme and the implications for treatment of the target population).

Exclusion criteria which will remain as contraindications	
Criteria	Implications for target population
1	
2 etc.	

Exclusion criteria which are NOT proposed to remain as contraindications		
Criteria	Reason for being an exclusion criterion	Justification for not being a contraindication
1		
2 etc.		

SIV.3 Limitations in respect to populations typically under-represented in clinical trial development programmes

These categories are suggested headings as they are typically under-represented in the clinical trial programme. Their relevance will depend upon the medicinal product, the indication and the development programme. There may be other relevant categories which are applicable.

Children

Special consideration should be given to the experience in different paediatric age groups – e.g. ICH-E11 - since these relate to different physiological and anatomical development stages. If paediatric development has been limited to certain age categories then the implications for other paediatric age groups should also be discussed.

- Pre-term newborns
- Neonate (birth to 27 days)
- Infants and toddlers (28 days to 23 months)
- Children (2 years to e.g. 11 years)
- Adolescents (e.g. 12 years to 17 years)

Elderly

Implications on the use in patients of 65 and older should be discussed with appropriate consideration to the top ranges of the age spectrum. The effect of individual impairment should be discussed in the sections below but the effects of multiple (minor) co-existing impairments and also adverse reactions of particular concern in the elderly should be discussed.

- Use in different age ranges: e.g. 65-74, 75-84, >85
- Need for laboratory screening prior to use
- Effect of multiple co-existing impairments
- Adrs of special concern – e.g. dizziness, CNS effects
- Effect of multiple medications

Pregnant or breast feeding women

If the target population includes women of child-bearing age, the implications for pregnancy and/or breast feeding should be discussed. If contraception was a clinical trial requirement the following should also be discussed:

- Number of pregnancies and outcomes
- Analysis of why contraceptive measures failed – i.e. consideration of whether human error or an interaction between product and e.g. oral contraceptives
- Implications for use under less controlled conditions (i.e. if measures failed under the relatively strict conditions of a trial, what will happen in real life, and if necessary suggestions for improvement)

Patients with hepatic impairment

Patients with renal impairment

Patients with other relevant co-morbidity e.g.

- Cardiovascular
- Immuno-compromised including transplant patients

Patients with a disease severity different from the inclusion criteria in the clinical trial population

Sub-populations carrying known and relevant polymorphisms

The extent of pharmacogenetic effects and the implications of genetic biomarker use in the target population should be discussed where relevant. The implications for patients with/without a specific genetic marker/specific mutation or with unknown status should be stated - in particular where the indication requires genetic testing.

Patients of different racial and/or ethnic origin

*The implications for use in patients with different racial and/or ethnic origins should be discussed. In particular differences in the frequency or types of gene variants for drug metabolising enzymes may give rise to important differences in pharmacokinetics and/or frequency of adverse reactions. This variations in frequencies of particular alleles may have implications for drug use or for pre-treatment testing in patients of particular populations – e.g. HLA-B*1502 allele is associated with severe cutaneous adverse reactions to carbamazepine and is found in approximately 10% in some Asian populations but rarely in those of European descent.*

SIV.4 Conclusions on the populations not-studied and other limitations of the clinical trial development programme

Missing information

Where the missing information from the clinical trial programme could constitute an important risk to the target population it should be considered to be a safety concern and should be stated here. If the missing information has been adequately investigated outside of the clinical programme this should be noted (with cross reference to the appropriate RMP section) in the comment section. Only safety concerns which are still outstanding should be carried through to RMP Part II Module SVIII.

Safety concerns due to limitations of the clinical trial programme		**Outstanding concern?**
Safety concern	Comment	Yes/No
1		Choose one of the following: • Yes • No
2 etc.		Choose one of the following: • Yes • No

Part II: Module SV - Post-authorisation experience

The purpose of this RMP module is to provide information on the number of patients exposed post authorisation; how the medicinal product has been used in practice and labelled and off-label use. It should also include brief information on the number of patients included in any completed or on-going observational studies conducted either to elucidate a safety issue or for drug utilisation purposes. It is appreciated that detailed data may not be available. These tables provide guidance on how the data might be provided when available. Details of significant actions taken to update information on the safety of the medicinal product should also be provided in this module.

SV.1 Action taken by regulatory authorities and/or marketing authorisation holders for safety reasons

List any significant regulatory action (including those initiated by the MAH in any market in relation to a safety concern. Significant regulatory action would include a restriction to the approved indication, a new contra-indication, a new or strengthened warning in section 4.4 of the SPC (or equivalent) or any action to suspend or revoke a marketing authorisation.

The list should be cumulative but newly taken action (since last update to the module) should be presented separately first, as well as being in the cumulative list. For each action taken specify the country and the date. Roll-out in multiple countries of a new safety statement initiated by the MAH can be presented as one action (but list all countries and range of dates e.g. March-September 2011.) Comments may be added if the regulatory action is not applicable to certain products/formulations as authorised in the Arab Country concerned.

Table 1. Detailed description of action taken since last update to this module

Safety issue	
Background to issue	
Evidence source	
Action taken	
Countries affected	
Date(s) of action	

Table 2. Cumulative list

Safety concern 1			
Country(ies)	Action taken	Comment	Date(s)

Safety concern 2 etc.			
Country(ies)	Action taken	Comment	Date(s)

SV.2 Non-study post-authorisation exposure

Where possible, data on patients exposed post marketing should be provided based on market research. When the number of persons is calculated on the basis of sales data, details and justification should be provided of the measure used to calculate exposure. Tables should be provided for each indication and route of administration where possible.

SV.2.1 Method used to calculate exposure

If different methods have been used to calculate exposure for some tables, this section should be repeated before the relevant table(s).

SV.2.2 Exposure

By age group and gender				
Indication				
Age Group	Persons		Exposure (e.g. packs or person years)	
	M	F	M	F
Age group 1				
Age group 2				
Etc.				

By indication		
	Persons	Exposure (e.g. packs or person years)
Indication 1		
Indication 2		
Etc.		

By route of administration		
	Persons	Exposure (e.g. packs or person years)
Oral		
intravenous		
Etc.		

By dose		
Indication		
	Persons	Exposure (e.g. packs or person years)
Dose level 1		
Dose level 2		
Etc.		

By country		
Indication		
	Persons	Exposure (e.g. packs or person years)
Arab Country concerned		
Other countries		

Note the categories provided, are suggestions and other relevant variables can be used e.g. oral versus i.e., duration of treatment etc.

SV.3 Post-authorisation use in special populations not studied in clinical trials

Where there are data on post-authorisation use in the special populations identified in RMP module SIV as having no or limited exposure in clinical trials, estimation of the numbers exposed and the method of calculation should be provided whether or not the usage is on- or off-label. Comment on any differences in benefit or risk seen between the special population and the target population as a whole.

Paediatric use		
Estimated use	Number	Comment on any variation in benefit or risk from overall target population

Paediatric use		
• Pre-term new-borns • Neonates (birth to 27 days) • Infants and toddlers (1 month to 23 months) • Children (2 years to e.g. 11 years) • Adolescents (e.g. 12 years to 18 years)		
Data source		
Method of calculation		

Elderly use		
Estimated use	Number	Comment on any variation in benefit or risk from overall target population
• 65 – 74 years • 75 – 84 years • 85+ years		
Data source		
Method of calculation		

Pregnant or breast feeding women		
Estimated use	Number	Comment on any variation in benefit or risk from overall target population
• Pregnant • Breast feeding		
Data source		
Method of calculation		

Hepatic impairment		
Estimated use	Number	Comment on any variation in benefit or risk from overall target population
• Mild • Moderate • Severe		
Data source		
Method of calculation		

Renal impairment		
Estimated use	Number	Comment on any variation in benefit or risk from overall target population
• Mild • Moderate • Severe		
Data source		
Method of calculation		

Other use (specify)		
Estimated use	Number	Comment on any variation in benefit or risk from overall target population
• Specify category • Specify category • Specify category		
Data source		
Method of calculation		

SV.4 Post-authorisation off-label use

Post marketing, updates to the safety specification, should include information on off-label use in the Arab Country concerned; i.e. the intentional use, for a medical purpose, which is not in accordance with the authorised product information for a medicinal product. Off-label use includes use in non-authorised paediatric age categories.

***<country name>* off-label use**			
Off label category	Country	Source of information	Comment
<E.g. Use in dysmenorrhoea (non-authorised indication)>	<E.g. Egypt>	<E.g. study name: Drug utilisation study using Health Insurance prescription records, Egypt>	<E.g. Epidemiological study in health care records found 15 women (1.7%) prescribed <<*medicine name*>> for dysmenorrhoea out of total of 975 users>

SV.5 Epidemiological study exposure

Marketing authorisation holders should provide a listing of epidemiological studies which are, or have been, conducted to elucidate safety or efficacy issues, study drug utilisation or measure effectiveness of risk minimisation measures. This listing should include studies undertaken by the marketing authorisation holder itself or funded by them via a grant, whether specific or unconditional. Studies undertaken by a marketing partner, or where the MAH has been sent the results by a third party, should also be included.

Study title and study type (e.g. cohort or case/control)	**Objectives**	**Population studied (data source and country)**	**Duration (study period)**	**Number of persons (in each group or of cases and controls) and person time (if appropriate)**	**Comment**
<E.g. <<study name>> (cross sectional DUS)>	<E.g. Investigate utilisation of <<*medicine name*>> in General Practice in Egypt>	<E.g. Health Insurance prescription records , Egypt>	<E.g. 3 month time window>	<E.g. 975 users from study population of 3.5M>	<E.g. Study report in annex 5>
Study 2 etc.					

Part II: Module SVI - Additional requirements for the safety specification

SVI.1 Potential for harm from overdose

Discuss the potential for harm from overdose – either intentional or accidental. Give special attention to medicinal products where there is increased risk of harm – either where there is a narrow therapeutic margin or potential for major dose-related toxicity, and/or where there is a high risk of intentional overdose in the treated population. Where harm from overdose has occurred during clinical trials, this should be explicitly mentioned. Where appropriate, overdose should be included as a safety concern in RMP Module SVIII

SVI.2 Potential for transmission of infectious agents

The applicant/marketing authorisation holder should discuss the potential for the transmission of an infectious agent. This may be because of the nature of the manufacturing process or the materials involved. For vaccines, any potential for the transmission of live virus should be discussed. For advanced therapy medicinal products, a cross reference to RMP modules SVII (ATMP) may be made.

SVI.3 Potential for misuse for illegal purposes

Discuss the potential for use as a recreational drug or facilitating assault etc. If appropriate discuss the means of limiting this in the risk minimisation plan.

SVI.4 Potential for medication errors

If necessary, this section may be completed separately for each product.

SVI.4.1 Description of medication errors during the clinical trial programme

Product name(s)				
Description of error	Number of occurrences	Analysis of cause	Steps taken to prevent	Comment

SVI.4.2 Preventive measures for the final product(s) being marketed

Discuss how the following errors have been prevented in the design of the product, packaging, labelling etc.

- Prevention of error due to wrong medication
- Prevention of error due to wrong dose (strength, form, concentration, frequency)

- Prevention of error due to wrong route of administration

SVI.4.3 Effect of device failure

For products where a device is an integral part of the administration of the product.

SVI.4.4 Reports of medication errors with the marketed product(s)

Product name(s)				
Description of error	Number of occurrences	Analysis of cause	Steps taken to prevent	Comment

Where multiple strengths, posologies or concentrations are available, or where different products have different formulations, reconstitution differences etc., consideration should be given to including "medication error" as a safety concern.

SVI.5 Potential for off-label use

The potential for off-label use should be discussed. This is particularly relevant where a medicinal product has an indication restricted to a subset of the population within a disease area or there are situations where the medicinal product must not be given for safety reasons. The potential for use in other disease areas should also be considered where this is likely.

SVI.6 Specific Paediatric issues

SVI.6.1 Issues identified in paediatric investigation plans

Any issues identified in paediatric investigation plans should be detailed and the relevance to the indications covered by this RMP discussed. Include details of how paediatric investigation plan recommendations have been considered. Cross reference may be made to other RMP Modules.

Product Name and PIP <Number>		
Issue (safety or long term efficacy)	Background	Relevance to indications covered in this RMP and how, if appropriate, it will be addressed.

SVI.6.2 Potential for paediatric off-label use

If the disease or disorder which is being treated or prevented is found in the paediatric population, and the product is not authorised in all paediatric age groups, the potential for off-label paediatric use in the non-authorised age groups should be discussed. If there are limited treatment options it should not be assumed that clinicians will adhere to the labelled indication so it is important that potential paediatric issues are discussed and consideration given for their inclusion as a safety concern. Any actual use should be discussed and cross referenced to other relevant RMP sections provided.

SVI.7 Conclusions

Safety concerns from this module (to be carried through to Part II Module SVIII)	
Safety concern	Comment

Part II: Module SVII - Identified and potential risks

Non-ATMP version

This RMP module should provide more information on the important identified and potential risks. This RMP section should be concise and should not be a data dump of tables or lists of adverse reactions from clinical trials, or the proposed or actual contents of section 4.8 of the summary of product characteristics (SmPC). It should include only the important identified and potential adverse events/reactions, important identified and potential interactions with other medicinal products, foods and other substances, and the important pharmacological class effects.

What constitutes an important risk will depend upon several factors including the impact on the individual patient, the seriousness of the risk and the impact on public health. Normally, any risk which is clinically important and which is/is likely to be included in the contraindications, or warnings and precautions section of the summary of product characteristics (SmPC) should be included here. In addition, risks, which whilst not normally serious enough to require specific warnings or precautions, but which occur in a significant proportion of the treated population, affect the quality of the treated person's life, and which could lead to serious consequences if untreated, should also be considered for inclusion, e.g. severe nausea and vomiting with chemotherapy.

For some products, disposal of the used product may constitute a safety concern, e.g. transdermal patches where there may be significant amounts of active substance remaining in the patch when it is discarded. There may also be occasions where there is an environmental concern over product disposal because of known harmful effects on the environment, e.g. substances which are particularly hazardous to aquatic life which should not be disposed of in landfill sites.

Because of the need for different additional categories of risks to be considered with advanced therapy medicinal products, a different version of the template for RMP module SVII is available for products classified as advanced medicinal products. Only one version of the template of RMP module SVII should be used in a RMP.

SVII.1 Newly identified safety concerns (since this module was last submitted)

Safety concern
Details
Source
New studies proposed in pharmacovigilance plan? Yes/No
New risk minimisation actions proposed? Yes/No

SVII.2 Recent study reports with implications for safety concerns

Study reports (either interim or final, from whichever type of study), since the last RMP, which contain results which have a significant impact on an existing safety concern should be discussed

here. The conclusions should be incorporated into the other sections and modules of the safety specification as appropriate with detailed information on the risk provided in SVII.3.

Details of the above safety concerns should also be provided below.

SVII.3 Details of important identified and potential risks from clinical development and post-authorisation experience (including newly identified)

This RMP section should provide information on the important identified and important potential risks. This section should be concise and should NOT be a data dump of tables or lists of adverse reactions from clinical trials, or the proposed or actual content of section 4.8 of the summary of product characteristics. For most RMPs involving single products, risks which relate specifically to an indication or formulation can usually be handled as individual safety concerns, e.g. accidental IV administration could be a safety concern in a single product with both oral and subcutaneous forms. It may be appropriate to include risks associated with a significant change to a manufacturing process (particularly for biologicals) and risks associated with medication error

For RMPs covering multiple products where there are significant differences in the identified and potential risks for different products, it may be appropriate to categorise the risks to make it clearer which risks relate to which product. Division of identified and potential risks using the headings below ***should only*** *be considered when the risks clearly do not apply to some products and lack of separation could cause confusion. Headings which could be considered include:*

- Risks relating to the active substance

This would include important identified or potential risks which are common to all formulations, routes of administration and target populations. It is likely that most risks will fall into this category for the majority of products.

- Risks related to a specific formulation, indication or route of administration

Examples might include an RMP with two products with completely different indications: e.g. sildenafil with an indication in one product for erectile dysfunction and in a second product for pulmonary arterial hypertension.

- Risks relating to a specific target population

The paediatric population is an obvious example of a target population where there may be additional risks relating to physical, mental and sexual development which would not be relevant to a product intended solely for adult patients.

- Risks associated with switch to non-prescription status

For each important identified and important potential risk[66] provide the following information if available:

NB: If preferred this can be provided outside of the table format using the sections (as detailed in the first column) as paragraph headings.

[66] For definitions see Good Vigilance Practices (GVP) Module V, chapter V.B.1.

Identified/potential Risk66 <>	
Frequency with 95 % CI	*State clearly which frequency parameter is being used e.g. incidence rate or incidence risk and the data source e.g. blinded clinical trial population, epidemiological study. For identified risks incidence should be presented for the whole population and relevant subpopulation categories.* *(see also section V.B.8.7.3 of GVP Module V)* *Where there are clear differences in rates between populations, this should be discussed*
Seriousness/outcomes	*Tabulate the distribution of outcomes e.g. % fatal, % recovered/with/without treatment/sequelae, % not recovered, % hospitalised etc.*
Severity and nature of risk	*e.g. tabulate grades of severity where available*
Background incidence/prevalence	*Background incidence/prevalence of the risk in the unexposed target population(s)*
Risk groups or risk factors	*Describe patient factors, dose, time or other factors where available including additive or synergistic factors*
Potential mechanisms	*Describe*
Preventability	*Provide data on predictability or preventability of ADR, effect of known risk factors, mitigation through early detection*
Impact on individual patient	*effect on quality of life*
Potential public health impact of safety concern	*Describe or enumerate if possible, using e.g. Numbers Needed to Harm and/or expected number of patients affected, hospitalisations, fatalities given the predicted population use.*
Evidence source	*Identify, briefly describe and cross refer to supporting data in CTD or annex*
MedDRA terms	*Terms used in Annex 1 for post marketing surveillance*

SVII.4 Identified and potential interactions

SVII.4.1 Overview of potential for interactions

Discuss the main routes of metabolism and elimination and the potential for interactions due to effects on CYP enzymes, drug transporters etc.

SVII.4.2 Important identified and potential interactions

Identified and potential pharmacokinetic and pharmacodynamic interactions should be discussed in relation to both the treatments for the condition, but also in relation to commonly used medications in the target population. Important interactions with herbal medicines or with food should also be discussed.

Interacting substance(s)	< >
Effect of interaction	
Evidence source	
Possible mechanisms	
Potential health risk	
Discussion	

Consider including "interactions" as a safety concern in Part II Module SVIII.

SVII.5 Pharmacological class effects

Identify risks which are believed to be common to the pharmacological class.

SVII.5.1. Pharmacological class risks already included as important identified or potential risks

For risks which have been included above in "Details of important and identified and potential risks from clinical development and post-authorisation experience" above, provide the following details below.

Risk	**Frequency in clinical trials of medicinal product**	**Frequency seen with other products in same pharmacological class (source of data/journal reference)**	**Comment**
Risk 1		<E.g. Product A Product B Product C Review of adverse reactions BMJ 2008: 5; 214-217>	
Risk 2 etc.			

SVII.5.2. Important pharmacological class effects not discussed above

The table below should be provided for each important risk which has not been included in RMP module SVII "Details of important identified and potential risks from clinical development and post-authorisation experience" (above) but which is believed to be common to the pharmacological class. If an important potential risk, associated with other members of the pharmacological class, is not thought to be a safety concern with the medicinal product this should be justified and supporting evidence provided.

Potential Risk < >	
Seriousness/outcomes	
Severity and nature of risk	*e.g. tabulate grades of severity where available*
Frequency with other members of the same or similar pharmacological class with 95 % CI	
Risk groups or risk factors	*Describe use, dose, time and susceptibility data or other factors where available.*
Potential mechanisms	*Describe*
Comment	

Part II: Module SVIII - Summary of the safety concerns

A summary should be provided of the safety concerns identified in previous Modules (SII, SIV, SVI, and SVII) of Part II. A safety concern may be an:

- important identified risk;
- important potential risk; or
- missing information.

For RMPs covering multiple products where there may be significant differences in the important identified and important potential risks for different products, it may be appropriate to subdivide the summary of safety concerns under specific headings with the relevant identified and potential risks under each heading. Headings which could be considered include:

- safety concerns relating to the active substance;
- safety concerns related to a specific formulation or route of administration;
- safety concerns relating to the target population;
- risks associated with switch to non-prescription status.

Division of safety concerns by headings should only be considered when the risks clearly do not apply to some products and inclusion as a single list could cause confusion.

Table 3. Summary of safety concerns

Summary of safety concerns	
Important identified risks	<> List
Important potential risks	<> List
Missing information	<> List

Part III: Pharmacovigilance Plan

The Pharmacovigilance plan (PhV Plan) provides details of pharmacovigilance activities/ studies which are intended to identify and/or characterise safety concerns. What is required will depend upon the nature of the medicine, the target population, the number of safety concerns and where the medicine is in its life-cycle. A PhV Plan may also include details of studies to measure the effectiveness of risk minimisation measures for important measures where a formal study is required.

Some safety concerns may be well characterised in which case routine PhV will be sufficient. Depending upon the safety concern, and areas to be investigated, a PhV Plan will often include epidemiological (non-interventional) studies (such as cohort, case control, registries, drug utilisation etc.) but may also include interventional studies or more rarely pre-clinical activities (such as PK/PD, clinical trials, in vivo or in vitro studies). Further information on post authorisation safety studies is given in GVP Module VIII.

In the PhV Plan, section III.1 reviews each safety concern and what areas need investigation whereas III.4 gives details of the individual studies and milestones. Section III.2 provides details of any activities aimed at measuring the effectiveness of risk minimisation activities. The results of any studies in the PhV Plan should be briefly summarised in section III.3. If the study results concern the effectiveness of risk minimisation, brief results should be provided in section III.3. If the results suggest that the risk minimisation measure is failing in its objectives, this should be discussed with the root cause analysis and proposal for rectification in Part V of the RMP. Section III.5 summarises the entire PhV plan – both completed, on-going and planned activities.

III.1. Safety concerns and overview of planned pharmacovigilance actions

For each safety concern in Part II SVIII, provide details of specific areas that still need confirmation or further investigation – e.g. confirmation of incidence, investigation of risk factors. It may be that for a well characterised safety concern that there are no areas which need investigating in which case "none" should be written in column 1 and the only proposed action will be "routine pharmacovigilance". Some areas may need more than one activity to characterise a safety concern with different activities having different objectives. If a specific questionnaire is planned for collecting structured data on a safety concern of special interest this is still considered to be routine but should be mentioned and a mock up provided in RMP annex 7. A requirement to report on a specific adverse drug reaction at defined intervals resulting from a previous evaluation (e.g. PSUR/PBER) will be considered as routine pharmacovigilance but should be detailed in the table against the specific safety concern. Outstanding additional pharmacovigilance activities should be detailed in section III.4.

<Name Safety concern 1>		
Areas requiring confirmation or further investigation	Proposed routine and additional PhV activities	Objectives
1		
2		
3 etc.		

<Name Safety concern 2 >etc.		
Areas requiring confirmation or further investigation	Proposed routine and additional PhV activities	Objectives
1		
2		
3 etc.		

III.2. Additional pharmacovigilance activities to assess effectiveness of risk minimisation measures

Where there are risk minimisation measures which require the use of non-routine pharmacovigilance activities to measure the effectiveness, details should be provided here.

Risk minimisation measure		
Component measured	Activity(ies)	Rationale
Component 1		
Component 2 etc.		

III.3. Studies and other activities completed since last update of Pharmacovigilance Plan

This is a summary of completed studies and/or activities since the last update of the Pharmacovigilance Plan. The concise study report should be provided in RMP annex 9.

Study/activity title	
Safety concern(s)/risk minimisation measure investigated	
Brief summary of results	
Implications	

III.4. Details of outstanding additional pharmacovigilance activities

These are additional pharmacovigilance activities that considered key to the benefit risk of the product, specific obligation or those that are conducted or financed by the MAH to address particular safety concerns. These activities may include trials or studies which may be on-going (e.g. from clinical trials where the activity would be to provide a report) or be planned where the activity is to conduct the study. This would include studies or activities requested by another Regulatory authority where the results are expected to provide information relevant to existing areas of uncertainty. Studies which have been specifically requested by the medicines authority of the Arab Country concerned (which are not conditions of the marketing authorisation) or which may be suggested by the MAH to investigate a safety concern should also be included here. Studies to measure the effectiveness of risk minimisation measures would be normally included here.

Table 4. Required additional pharmacovigilance activities

	Description of activity (or study title if known)	**Milestone(s)**	**Due Date(s)**
1		1.(e.g. protocol submission)	<Enter a date>
		2.(e.g. study start)	<Enter a date>
		3.(e.g. study finish)	<Enter a date>
		4. (e.g. final report)	<Enter a date>
2 etc.		1.(e.g. protocol submission)	<Enter a date>
		2.(e.g. study start)	<Enter a date>
		3.(e.g. study finish)	<Enter a date>
		4. (e.g. final report)	<Enter a date>

III.5. Summary of the Pharmacovigilance Plan

III.5.1. Table of on-going and planned additional PhV studies/activities in the Pharmacovigilance (development) Plan

This should be a complete overview of all on-going and planned studies in the pharmacovigilance plan.

Study/activity Type, title	**Objectives**	**Safety concerns addressed**	**Status (planned, started)**	**Date for submission of interim or final reports (planned or actual)**
<E.g. CRUCIAL Cancer Registry at University College Liver unit (non-interventional cohort, 3)>	<E.g. To investigate long term survival, time to progression, safety profile and QoL in patients with primary liver cancer or solid tumour metastases>	<E.g. Bradycardia, thrombosis, leukopenia, use in patients with renal impairment, long term safety>	<E.g. Protocol submitted to <<authority name>>	<E.g. Interim reports planned June 2014, 2017. Final study report Dec 2020>
<E.g. Validation of antibody test (non-clinical, 3)>	<E.g. Comparison of Supertest kit with current gold standard>	<E.g. Development of antibodies>	<E.g. Planned start March 2014>	<E.g. Final study report December 2014>

III.5.2. Table of completed studies/activities from the Pharmacovigilance Plan

This should be a complete overview of all completed studies in the pharmacovigilance plan.

Study/activity Type, title	**Objectives**	**Safety concerns addressed**	**Status (Completed)**	**Date of submission of final study report**
<E.g.ABC-124 (randomised controlled trial, 3)>	<E.g. Compare time to disease progression with 3 different doses of Compare safety profile of different doses>	<E.g. Bradycardia, development of antibodies, Use in patients with renal impairment.>	<E.g. Completed. Final study report submitted>	<E.g. Final study report submitted 31st March 2013>

Part IV: Plans for post-authorisation efficacy studies

IV.1. Applicability of efficacy to all patients in the target population

Based on the data in RMP Part II modules SIII, SIV and SV, the MAH/Applicant should very briefly discuss whether there are any gaps in knowledge about efficacy in the target population and whether there is a need for further efficacy studies post-authorisation. This should NOT include efficacy studies aimed at extending the indication.

Factors which might be relevant include:

- Applicability of the efficacy data to all patients in the target population – e.g. if 98% of patients in trials were Caucasians discuss whether efficacy is likely to be same in other races in target population
- Factors which might affect the efficacy of the product in everyday medical practice – e.g. use in general practice rather than the clinical trial hospital out-patient setting
- Long term efficacy
- Any evidence that there might be variability in benefits of treatment for sub populations.

IV.2. Tables of post-authorisation efficacy studies

The MAH/Applicant should list any post authorisation efficacy studies which are proposed by the MAH/Applicant in relation to the above and also include those studies which have been imposed by the medicines authority in the Arab Country concerned or which are Specific Obligations. A synopsis of the protocols should be provided in Annex 8.

Table 5. Efficacy studies which are specific obligations (see footnote of section III.4.2) and/or conditions of the MA

Description of study (including objectives and study number)	**Milestone(s)**	**Due Date(s)**
	1.(e.g. protocol submission)	<Enter a date>
	2.(e.g. study start)	<Enter a date>
	3.(e.g. study finish)	<Enter a date>
	4. (e.g. final report)	<Enter a date>

Table 6. Other efficacy/effectiveness studies

Description of study (including objectives and study number)	**Milestone(s)**	**Due Date(s)**
	1.(e.g. protocol submission)	<Enter a date>
	2.(e.g. study start)	<Enter a date>
	3.(e.g. study finish)	<Enter a date>
	4. (e.g. final report)	<Enter a date>

IV.3. Summary of post authorisation efficacy development plan

This should be a complete overview of all studies (on-going, planned)

Study (type and study number)	Objectives	Efficacy uncertainties addressed	Status (planned, started)	Date for submission of interim or final reports

IV.4. Summary of completed post authorisation efficacy studies

Study (type and study number)	Objectives	Efficacy uncertainties addressed	Status (Completed, Study report submitted)	Date of submission of final study report

Part V: Risk minimisation measures

Each safety concern identified in module SVIII "summary of the safety specification" should be addressed. If no risk minimisation measures are proposed, then "none proposed" should be entered against the objective.

If several components make up one risk minimisation measure (e.g. a pregnancy prevention plan may have educational material for health care professionals and patients, algorithms for deciding on child-bearing potential, patient reminder cards etc.) these should be grouped together.

For each safety concern, provide details of what criteria will be used to judge whether risk minimisation measures are a success e.g. fewer than 2 pregnancy reports in period y, no cases of liver failure reported, drug utilisation study showing <5% off-label use etc.

Further guidance on risk minimisation measures can be found in GVP Module XVI and CIOMS IX.

V.1. Risk minimisation measures by safety concern

Safety concern	
Objective(s) of the risk minimisation measures	
Routine risk minimisation measures	(Proposed) text in SmPC <E.g. Dose reduction for ……. in section 4.2 of the SPC…… Warning in section 4.4 to…… Listed in section 4.8>
	Comment (e.g. on any differences between SmPCs)
	Other routine risk minimisation measures <E.g. Prescription only medicine Use restricted to physicians experienced in the treatment of…….>
Additional risk minimisation measure(s)1	Objective and justification of why needed.
	Proposed actions/components and rationale
Additional risk minimisation measure(s) 2 (repeat as necessary)	Objective and justification of why needed.
	Proposed actions/components and rationale

Effectiveness of risk minimisation measures	
How effectiveness of risk minimisation measures for the safety concern will be measured	*If a study is planned, this should also be included in Part III.2 Additional PhV activities to assess effectiveness of risk minimisation measures*
Criteria for judging the success of the proposed risk minimisation measures	
Planned dates for assessment	
Results of effectiveness measurement	Provide latest assessment at each update of the RMP. For risk minimisation measures where formal studies are planned, any results should be mentioned in Part III.2 with the implications discussed here and any remedial actions in V.2
Impact of risk minimisation	
Comment	

V.2. Risk minimisation measure failure (if applicable)

List the safety concerns and risk minimisation measures which are judged to have failed.. If not applicable do NOT omit the section instead state that "No risk minimisation measure failures"

Safety concern	**Risk minimisation measure**

V.2.1. Analysis of risk minimisation measure(s) failure

When risk minimisation measures for a safety concern are thought to be inadequate, a root cause analysis of where it is failing should be undertaken

Safety concern	
Risk minimisation measure(s)	
Component 1	Analysis
Component 2 etc.	Analysis
Discussion	

V.2.2. Revised proposal for risk minimisation

Based on the analysis of why the risk minimisation activities were inadequate, a proposal should be made for new (or revised) risk minimisation measures for the safety concern

Safety concern	
Objective(s) of the risk minimisation activities	
Routine risk minimisation activities	Synopsis of (proposed) text in SmPC
	Comment (e.g. on any differences between SmPCs)
	Other routine risk minimisation activities
Additional risk minimisation measure(s) (repeat as necessary)	Objective and justification of why needed.
	Proposed actions/components and rationale
Comment on how revised proposals will address failings	
Effectiveness of risk minimisation measures	
How effectiveness of risk minimisation measures for the safety concern will be measured	*If a study is planned, this should also be included in Part III: Additional PhV activities to assess effectiveness of risk minimisation measures*
Criteria for judging the success of the proposed risk minimisation measures	

V.3. Summary table of risk minimisation measures

Safety concern	**Routine risk minimisation measures**	**Additional risk minimisation measures**
	From V.1 "proposed text in SmPC" and "other routine risk minimisation measures"	From V.1 (list)
	<E.g. Dose reduction for ……. in section 4.2 of the SPC…… Warning in section 4.4 to…… Listed in section 4.8 Prescription only medicine Use restricted to physicians experienced in the treatment of……>	

Part VI: Summary of the risk management plan by product

A separate RMP Part VI should be provided for each product in the RMP.

VI.1. Summary of Safety concerns

Copy table from Part II: SVIII

Summary of safety concerns	
Important identified risks	<> List
Important potential risks	<> List
Missing information	<> List

In addition to the listing of the safety concerns in the above table; each safety concern should be briefly described using the following tables.

Important identified risks

Risk	**What is known**	**Preventability**
<Safety concern in medical term>	<Brief summary>	<Whether risk can be minimised or mitigated, and how>
<E.g. peripheral neuropathy>	<E.g. Approximately one in two people treated with x will experience some form of peripheral neuropathy which may increase to three out of four people after 12 months of treatment. The peripheral neuropathy varies from mild tingling and altered sensation to irreversible disabling damage in the most severe cases. Early symptoms usually resolve or improve upon dose adjustment or discontinuation of therapy. >	<E.g. Yes, by monitoring for early symptoms >
<E.g. thromboembolic events {TEE}>	<E.g. These may affect the arteries or veins. In the veins this may lead to a painful swelling of the legs (deep vein thrombosis) and very occasionally life threatening or fatal clots in the lungs. Clots in the arteries may lead to a heart attack or stroke – particularly in patients who already have problems with their arteries. Patients with cancer who are being treated with oestrogen are already at higher risk of thromboembolic events so it is difficult to assess what extra risk is caused by x.>	<E.g. Yes with preventative anti-thrombotic medicines >

Important potential risks

Risk	What is known (Including reason why it is considered a potential risk)
<E.g. Secondary primary cancers>	<E.g. Patients treated with X may be at an increased risk of developing new cancers. There are theoretical mechanisms and more patients treated with X developed new cancers than those not treated with X, but this could also be due to the fact that they live longer.>

Missing information

Risk	What is known
<E.g. Limited information on use in patients with renal impairment>	<E.g. X itself is not eliminated to any significant extent by the kidney so it is unlikely that renal impairment will lead to problems. Some of its metabolites are eliminated by the kidney so it is recommended that patients with severe renal impairment are monitored carefully. >

VI.2. Summary of Risk Minimisation Measures by safety concern

Copy table V.3 from Part V

Safety concern	Routine risk minimisation measures	Additional risk minimisation measures

VI.3. Planned Post authorisation development plan

From combined summary tables in Part III. 5.1. and Part IV.3

1. List of studies in post authorisation development plan

Study (type and study number)	**Objectives**	**Efficacy uncertainties addressed**	**Status**	**Date for submission of interim or final reports**

2. Studies which are a condition of the marketing authorisation

<None of the above studies are conditions of the marketing authorisation>

< <study(ies)> <is><are> <a> condition<s> of the marketing authorisation

Mention all studies in the table (including specific obligations) which are conditions of the MA.

VI.4. Summary of changes to the Risk Management Plan over time

Major changes to the Risk Management Plan over time

Version	**Date**	**Safety Concerns**	**Comment**
	At time of authorisation dd/mm/yyyy	Identified Risks Potential Risks Missing information	
<E.g. 7.0>	<E.g. 17/08/2014>	<E.g. Allergic conditions added as an identified risk Hypersensitivity removed as an identified risk Severe infection added as an identified risk Convulsions added as a potential risk>	<E.g. The previous term hypersensitivity was updated to allergic conditions to include angioedema and urticarial>

Part VII: RMP Annexes

Provide here a list of the RMP annexes

List of annexes

Annex 1 – "National Pharmacovigilance and Safety reports database" /"National Pharmacovigilance Issues Tracking Tool" Interface

Annex 2 - SmPC & Package Leaflet

Annex 3 - Worldwide marketing authorisation by country (including Arab Country(s) concerned)

Annex 4 - Synopsis of on-going and completed clinical trial programme

Annex 5 - Synopsis of on-going and completed pharmacoepidemiological study programme

Annex 6 - Protocols for proposed and on-going studies in the section "Summary table of additional pharmacovigilance activities" in RMP Part III

Annex 7 - Specific adverse event follow-up forms

Annex 8 - Protocols for proposed and on-going studies in RMP Part IV

Annex 9 - Newly available study reports for RMP Parts III & IV

Annex 10 - Details of proposed additional risk minimisation measures (if applicable)

Annex 11 - Mock-up of proposed additional risk minimisation measures (if applicable)

Annex 12 - Other supporting data (including referenced material)

RMP Annex 1 – "National Pharmacovigilance and Safety reports database"/"National Pharmacovigilance Issues Tracking Tool" Interface

Available in electronic format only

Applicable only in some Arab Countries hence this annex should be submitted only upon request from the medicines authority of the Arab Countries concerned. Further details will be announced by authorities who require such annex.

*In Arab Countries who do not require this annex, it should be omitted (**WITHOUT** changing the numbering of the following annexes).*

RMP Annex 2 - SmPC & Package Leaflet

Current (or proposed if product is not authorised) local (of the concerned Arab Country) summary of product characteristics (SmPC) and package leaflet(s) for each product in the RMP.

If multiple versions are included for a product, they should show in which Country(s) they are applicable. In addition, if available, a core SmPC should be provided with an overview of the changes applicable to the SmPC in the Arab Country concerned.

RMP Annex 3 - Worldwide marketing authorisation by country (including Arab Country(s) concerned)

For each product in the RMP provide:

A3.1 Licensing status in the Arab Country(s) concerned

Country	Current licence status	Date of licence action *	Date first marketed in country	Current marketing status	Trade name(s)	Comments
	Choose one of the following: • Approved • Refused • Under review • Suspended • Expired • Withdrawn	<Enter a date>	<Enter a date>	Choose one of the following: • Marketed • Not marketed (if not marketed specify the date withdrawn from market)		If product has different routes of authorisation e.g. national + MRP in the EEA, note here which one applies

* Enter the date of the most recent change to the licence status: eg date of approval or date of suspension

A3.2 Licensing status in the rest of the world

Country	Current licence status	Date of licence action [1]	Date first marketed in country	Current marketing status	Trade name(s)	Comments
	Choose one of the following: • Approved • Refused • Under review • Suspended • Expired • Withdrawn	<Enter a date>	<Enter a date>	Choose one of the following: • Marketed • Not marketed (if not marketed specify the date withdrawn from market)		If product has different routes of authorisation e.g. national + MRP in the EEA, note here which one applies

RMP Annex 4 - Synopsis of on-going and completed clinical trial programme

Study	**Description (Phase, short description of study (1 – 2 sentences including comparator name(s)/placebo))**	**Countries**	**Study design**	**Planned/actual number of patients**	**Duration of follow up**	**Estimated/Actual completion date**
Main or pivotal studies						
<E.g. Study ABC>	<E.g. Study versus ibuprofen in adults with mild postoperative pain Phase III>	<E.g. Germany, USA, Chile, Egypt>	<E.g. Randomised double-blind>	<E.g. 4075>	<E.g. 14 days>	<E.g. Jan 2005>
Further safety/efficacy studies						
Studies in special populations (e.g. paediatric, elderly)						

RMP Annex 5 - Synopsis of on-going and completed pharmacoepidemiological study programme

Study	Research question	Study design	Population & study size	Duration of follow up	Milestones & dates	Status
						Choose one of the following: • Planned • Protocol under development • Protocol agreed • Data collection started • Data collection ended • Study completed

RMP Annex 6 - Protocols for proposed and on-going studies in the section "Summary table of additional pharmacovigilance activities" in RMP part III

Overview of included protocols

Study title	Protocol status *	Version of protocol	Date of protocol version
	Choose one of the following: • Draft • Approved		<Enter a date>

* Draft = not approved

Approved = when agreed by national authority as appropriate

RMP Annex 7 - Specific adverse event follow-up forms

Provide forms

RMP Annex 8 - Protocols for proposed and on-going studies in RMP part IV

Study title	Protocol status *	Version of protocol	Date of protocol version
	Choose one of the following: • Draft • Approved		<Enter a date>

*Draft = not approved

Approved = when agreed by Authority

RMP Annex 9 - Newly available study reports for RMP parts III & IV

Include the study abstract. For non-interventional studies use the abstract format detailed in Module: VIII Post Authorisation Safety Studies of Good Pharmacovigilance Safety Studies

RMP Annex 10 - Details of proposed additional risk minimisation measures (if applicable)

RMP Annex 11 - Mock-up of proposed additional risk minimisation measures (if applicable)

Mock up examples in English (unless other language is requested by the medicines authority of the Arab Country concerned) (of the material provided to healthcare professionals and patients. For those materials directed to patients, in addition to the English version, Arabic translation of the mock up shall be included as well.

RMP Annex 12 - Other supporting data (including referenced material)

Index of included material

Annex II.2. Template of the Risk Management Plan (RMP) in the Arab Countries for Generics (Rev.1)

Active substance(s) (INN or common name):	
Pharmaco-therapeutic group (ATC Code):	
Name of Marketing Authorisation Holder or Applicant:	
Name of the pharmacovigilance representative (if applicable)	
Number of medicinal products to which this RMP refers:	Choose one of the following: 1 2 3 4 5 6
Product(s) concerned (brand name(s)):	<list>

Data lock point for this RMP <Enter a date> Version number <Enter a version no>

Date of final sign off <Enter a date>

Abridged RMP table of content

Provide here the table of content of the abridged RMP and its annexes (hyperlink) showing the page number

Part I: Product(s) Overview .....

Part II: Module SV - Post-authorisation experience .....

SV.1 Action taken by regulatory authorities and/or marketing authorisation holders for safety reasons .....

SV.2 Non-study post-authorisation exposure .....

SV.2.1 Method used to calculate exposure .....

SV.2.2 Exposure .....

SV.3 Post-authorisation use in special populations not studied in clinical trials .....

SV.4 Post-authorisation off-label use .....

SV.5 Epidemiological study exposure .....

Part II: Module SVIII - Summary of the safety concerns .....

Part III: Pharmacovigilance Plan .....

III.1 Safety concerns and overview of planned pharmacovigilance actions .....

III.2 Additional pharmacovigilance activities to assess effectiveness of risk minimisation measures .

III.3 Studies and other activities completed since last update of Pharmacovigilance Plan .....

III.4 Details of outstanding additional pharmacovigilance activities .....

III.5 Summary of the Pharmacovigilance Plan .....

III.5.1 Table of on-going and planned additional PhV studies/activities in the Pharmacovigilance (development) Plan .....

III.5.2 Table of completed studies/activities from the Pharmacovigilance Plan .....

Part IV: Plans for post-authorisation efficacy studies .....

IV.2 Tables of post-authorisation efficacy studies .....

IV.3 Summary of post authorisation efficacy development plan .....

IV.4 Summary of completed post authorisation efficacy studies .....

Part V: Risk minimisation measures .....

V.1 Risk minimisation measures by safety concern .....

V.2 Risk minimisation measure failure (if applicable) .....

V.2.1 Analysis of risk minimisation measure(s) failure .....

V.2.2 Revised proposal for risk minimisation .....

V.3 Summary table of risk minimisation measures .....

Part VI: Summary of the risk management plan by product .....

VI.1 Summary of Safety concerns .....

VI.2 Summary of Risk minimisation measures by safety concern .....

VI.3 Planned Post authorisation development plan .....

VI.4 Summary of changes to the Risk Management Plan over time .....

Part VII: RMP Annexes .....

RMP Annex 1 – "National Pharmacovigilance and Safety reports database" /"National Pharmacovigilance Issues Tracking Tool" Interface .....

RMP Annex 2 - SmPC & Package Leaflet .....

RMP Annex 3 - Worldwide marketing authorisation by country (including Arab Country(s) concerned).....

RMP Annex 4 - Synopsis of on-going and completed clinical trial programme .....

RMP Annex 5 - Synopsis of on-going and completed pharmacoepidemiological study programme .....

RMP Annex 6 - Protocols for proposed and on-going studies in the section "Summary table of additional pharmacovigilance activities" in RMP part III.....

RMP Annex 7 - Specific adverse event follow-up forms .....

RMP Annex 8 - Protocols for proposed and on-going studies in RMP part IV.....

RMP Annex 9 - Newly available study reports for RMP parts III & IV .....

RMP Annex 10 - Details of proposed additional risk minimisation measures (if applicable).....

RMP Annex 11 - Mock-up of proposed additional risk minimisation measures (if applicable) .....

RMP Annex 12 - Other supporting data (including referenced material).....

This guidance covers the Parts and modules of the abridged RMP which may be required for applications concerning **generics** in the Arab Countries. Modules and sections in the RMP which are ALWAYS NOT required from generics are omitted in this guidance of abridged RMP. Please note that the naming and numbering of the parts, modules & sections are standardised thus should NOT be changed due to the omission of unrequired sections.

Other sections of the abridged RMP apply to generics in ONLY certain situations as described below those have been provided here for completeness. Parts III and IV many not be required and applicants are encouraged to discuss the need with the competent authority prior to submission of the RMP.

Part I: Product(s) Overview

Administrative information on the RMP

Part	**Module/annex**	**Date last updated for submission (sign off date)**	***Version number of RMP when last submitted/**
Part II Safety Specification	SV Post authorisation experience Only required for updates to the RMP	<Enter a date>	
	SVIII Summary of the safety concerns	<Enter a date>	
Part III Pharmacovigilance Plan	Only needed if reference product has additional PhV activities	<Enter a date>	
Part IV Plan for post-authorisation efficacy studies	Only needed if reference product has imposed post-authorisation efficacy studies	<Enter a date>	
Part V Risk Minimisation Measures		<Enter a date>	
Part VI Summary of RMP		<Enter a date>	
Part VII Annexes	ANNEX 2 Current or proposed SmPC/PIL	<Enter a date>	
	ANNEX 3 Worldwide marketing status by country	<Enter a date>	
	ANNEX 5 Synopsis of pharmacoepidemiological study programme	<Enter a date>	
	ANNEX 6 Protocols for proposed and on-going studies in Part III	<Enter a date>	
	ANNEX 7 Specific adverse event follow-up forms	<Enter a date>	

Part	Module/annex	Date last updated for submission (sign off date)	*Version number of RMP when last submitted/
	ANNEX 8 Protocols for studies in Part IV	<Enter a date>	
	ANNEX 9 Synopsis of newly available study reports in Parts III-IV	<Enter a date>	
	ANNEX 10 Details of proposed additional risk minimisation activities	<Enter a date>	
	ANNEX 11 Mock up examples	<Enter a date>	
	ANNEX 12 Other supporting data	<Enter a date>	

** A new RMP version number should be assigned each time any Parts/modules are updated*

QPPV name .....

QPPV signature .....

Contact person for this RMP .....

E-mail address or telephone number of contact person .....

There can only ever be ONE agreed RMP for a product or products. Wherever possible there should only be one additional submitted RMP version under evaluation. To facilitate this, MAHs are reminded that where possible "routine" updates of a RMP(if applicable) should NOT be submitted when there is already a version of a RMP being evaluated as part of an on-going procedure. A cover letter should be submitted instead stating that there is no change to the RMP version xx dated yy submitted as part of procedure.

Where a procedure would normally require the submission of an updated RMP as part of the dossier, but there is already another version under evaluation because of another procedure, it is also possible to submit a letter as stated above.

In some circumstances there may be a need to submit a third RMP which is a different version from both the agreed RMP and a second RMP version currently undergoing evaluation e.g. if new safety concerns have been recently identified or if a new indication requires different risk minimisation measures. In this case, different versions of a RMP will be simultaneously under evaluation. The purpose of this section is to provide oversight.

Overview of versions:

Version number of last agreed RMP:

Version number	<Enter a version no>
Agreed within	<Indicate procedure>

Current RMP versions under evaluation:

RMP Version number	Submitted on	Submitted within
<Insert number>	<Enter a date>	<indicate procedure >
… etc.		

For each product in the RMP

Invented name(s) in the Arab Country concerned	
Brief description of the product including: • chemical class • summary of mode of action • important information about its composition (e.g. origin of active substance of biological, relevant adjuvants or residues for vaccines	
Indication(s)	Current (if applicable) **in the Arab Country concerned**
	Current of the reference medicinal product*
	Proposed (if applicable) **in the Arab Country concerned**
	That of the reference medicinal product*
Posology and route of administration in the Arab Country concerned	Current (if applicable) **in the Arab Country concerned**
	Current of the reference medicinal product *
	Proposed (if applicable) **in the Arab Country concerned**
	That of the reference medicinal product *
Pharmaceutical form(s) and strengths	Current (if applicable) **in the Arab Country concerned**
	Current of the reference medicinal product *
	Proposed (if applicable) **in the Arab Country concerned**
	That of the reference medicinal product *

Country and date of first authorisation worldwide	<Enter a country> <Enter a date>
Country and date of first launch worldwide	<Enter a country> <Enter a date>
Date of first authorisation (if authorised) in the Arab Country concerned	<Enter a date>

Is the product subject to additional monitoring[67]? Yes ☐ No ☐

* Identify the reference medicinal product name & MAH

[67]This is a European system which is adopted by the Arab Countries unless otherwise announced by the national medicines authority(s). For more information on additional monitoring see GVP in Arab Countries Module X: additional monitoring.
The list of medicines under additional monitoring includes medicines authorised in the European Union (EU) that are being monitored particularly closely by regulatory authorities. Medicines under additional monitoring have a black inverted triangle displayed in their package leaflet and summary of product characteristics, together with a short sentence explaining what the triangle means.

Part II: Module SV - Post-authorisation experience

Only required for updates to the RMP

The purpose of this RMP module is to provide information on the number of patients exposed post authorisation; how the medicinal product has been used in practice and labelled and off-label use. It should also include brief information on the number of patients included in any completed or on-going observational studies conducted either to elucidate a safety issue or for drug utilisation purposes. It is appreciated that detailed data may not be available. These tables provide guidance on how the data might be provided when available. Details of significant actions taken to update information on the safety of the medicinal product should also be provided in this module.

SV.1. Action taken by regulatory authorities and/or marketing authorisation holders for safety reasons

List any significant regulatory action (including those initiated by the MAH in any market in relation to a safety concern. Significant regulatory action would include a restriction to the approved indication, a new contra-indication, a new or strengthened warning in section 4.4 of the SPC (or equivalent) or any action to suspend or revoke a marketing authorisation.

The list should be cumulative but newly taken action (since last update to the module) should be presented separately first, as well as being in the cumulative list in addition specify the country, the action taken and the date. Roll-out in multiple countries of a new safety statement initiated by the MAH can be presented as one action (but list all countries and range of dates e.g. March-September 2011.) Comments may be added if the regulatory action is not applicable to certain products/formulations as authorised in the Arab Country concerned.

Table 7. Detailed description of action taken since last update to this module

Safety issue	
Background to issue	
Evidence source	
Action taken	
Countries affected	
Date(s) of action	

Table 8. Cumulative list

Safety concern 1			
Country(ies)	Action taken	Comment	Date(s)

Safety concern 2 etc.			
Country(ies)	Action taken	Comment	Date(s)

SV.2. Non-study post-authorisation exposure

Where possible, data on patients exposed post marketing should be provided based on market research. When the number of persons is calculated on the basis of sales data, details and justification should be provided of the measure used to calculate exposure. Tables should be provided for each indication and route of administration where possible.

SV.2.1. Method used to calculate exposure

If different methods have been used to calculate exposure for some tables, this section should be repeated before the relevant table(s).

SV.2.2. Exposure

By age group and gender				
Indication				
Age Group	Persons		Exposure (e.g. packs or person years)	
	M	F	M	F
Age group 1				
Age group 2				
Etc.				

By indication		
	Persons	Exposure (e.g. packs or person years)
Indication 1		
Indication 2		
Etc.		

By route of administration		
	Persons	Exposure (e.g. packs or person years)
Oral		
intravenous		
Etc.		

By dose		
Indication		
	Persons	Exposure (e.g. packs or person years)
Dose level 1		
Dose level 2		
Etc.		

By country		
Indication		
	Persons	Exposure (e.g. packs or person years)
Arab Country concerned		
Other countries		

Note the categories provided, are suggestions and other relevant variables can be used e.g. oral versus I.V.., duration of treatment etc.

SV.3. Post-authorisation use in special populations

Where there are data on post-authorisation use in the special populations mentioned below, estimation of the numbers exposed and the method of calculation should be provided whether or not the usage is on- or off-label. Comment on any differences in benefit or risk seen between the special population and the target population as a whole.

Paediatric use		
Estimated use	Number	Comment on any variation in benefit or risk from overall target population
• Pre-term new-borns		

Paediatric use		
• Neonates (birth to 27 days) • Infants and toddlers (1 month to 23 months) • Children (2 years to e.g. 11 years) • Adolescents (e.g. 12 years to 18 years)		
Data source		
Method of calculation		

Elderly use		
Estimated use	Number	Comment on any variation in benefit or risk from overall target population
• 65 – 74 years • 75 – 84 years • 85+ years		
Data source		
Method of calculation		

Pregnant or breast feeding women		
Estimated use	Number	Comment on any variation in benefit or risk from overall target population
• Pregnant • Breast feeding		
Data source		
Method of calculation		

Hepatic impairment		
Estimated use	Number	Comment on any variation in benefit or risk from overall target population
• Mild • Moderate • Severe		
Data source		
Method of calculation		

Renal impairment		
Estimated use	Number	Comment on any variation in benefit or risk from overall target population
• Mild • Moderate • Severe		
Data source		
Method of calculation		

Other use (specify)		
Estimated use	Number	Comment on any variation in benefit or risk from overall target population
• Specify category • Specify category • Specify category		
Data source		
Method of calculation		

SV.4. Post-authorisation off-label use

Post marketing, updates to the safety specification, should include information on off-label use in the Arab Country concerned; i.e. the intentional use, for a medical purpose, which is not in accordance with the authorised product information for a medicinal product. Off-label use includes use in non-authorised paediatric age categories.

***<country name>* off-label use**			
Off label category	Country	Source of information	Comment
<E.g. Use in dysmenorrhoea (non-authorised indication)>	<E.g. Egypt>	<E.g. study name: Drug utilisation study using Health Insurance prescription records, Egypt>	<E.g. Epidemiological study in health care records found 15 women (1.7%) prescribed <<*medicine name*>> for dysmenorrhoea out of total of 975 users>

SV.5. Epidemiological study exposure (if applicable)

Marketing authorisation holders should provide a listing of epidemiological studies which are, or have been, conducted to elucidate safety or efficacy issues, study drug utilisation or measure effectiveness of risk minimisation measures. This listing should include studies undertaken by the marketing authorisation holder itself or funded by them via a grant, whether specific or unconditional. Studies undertaken by a marketing partner, or where the MAH has been sent the results by a third party, should also be included.

Study title and study type (e.g. cohort or case/control)	**Objectives**	**Population studied (data source and country)**	**Duration (study period)**	**Number of persons (in each group or of cases and controls) and person time (if appropriate)**	**Comment**
<E.g. <<study name>> (cross sectional DUS)>	<E.g. Investigate utilisation of <<*medicine name*>> in General Practice in Egypt>	<E.g. Health Insurance prescription records , Egypt>	<E.g. 3 month time window>	<E.g. 975 users from study population of 3.5M>	<E.g. Study report in annex 5>
Study 2 etc.					

Part II: Module SVIII - Summary of the safety concerns

A summary should be provided of the safety concerns. A safety concern may be an:

- important identified risk;
- important potential risk; or
- missing information.

For RMPs covering multiple products where there may be significant differences in the important identified and important potential risks for different products, it may be appropriate to subdivide the summary of safety concerns under specific headings with the relevant identified and potential risks under each heading. Headings which could be considered include:

- safety concerns relating to the active substance;
- safety concerns related to a specific formulation or route of administration;
- safety concerns relating to the target population;
- risks associated with switch to non-prescription status.

Division of safety concerns by headings should only be considered when the risks clearly do not apply to some products and inclusion as a single list could cause confusion.

Table 9. Summary of safety concerns

Summary of safety concerns	
Important identified risks	<> List
Important potential risks	<> List
Missing information	<> List

Part III: Pharmacovigilance Plan

(Only required if reference product has additional PhV activities or the concerned generic product has imposed additional PhV activities)

The Pharmacovigilance plan (PhV Plan) provides details of pharmacovigilance activities/ studies which are intended to identify and/or characterise safety concerns. What is required will depend upon the nature of the medicine, the target population, the number of safety concerns and where the medicine is in its life-cycle. A PhV Plan may also include details of studies to measure the effectiveness of risk minimisation measures for important measures where a formal study is required.

Some safety concerns may be well characterised in which case routine PhV will be sufficient. Depending upon the safety concern, and areas to be investigated, a PhV Plan will often include epidemiological (non-interventional) studies (such as cohort, case control, registries, drug utilisation etc.) but may also include interventional studies or more rarely pre-clinical activities (such as PK/PD, clinical trials, in vivo or in vitro studies). Further information on post authorisation safety studies is given in GVP Module VIII.

In the PhV Plan, section III.1 reviews each safety concern and what areas need investigation whereas III.4 gives details of the individual studies and milestones. Section III.2 provides details of any activities aimed at measuring the effectiveness of risk minimisation activities. The results of any studies in the PhV Plan should be briefly summarised in section III.3. If the study results concern the effectiveness of risk minimisation, brief results should be provided in section III.3. If the results suggest that the risk minimisation measure is failing in its objectives, this should be discussed with the root cause analysis and proposal for rectification in Part V of the RMP. Section III.5 summarises the entire PhV plan – both completed, on-going and planned activities.

III.1. Safety concerns and overview of planned pharmacovigilance actions

For each safety concern in Part II SVIII, provide details of specific areas that still need confirmation or further investigation – e.g. confirmation of incidence, investigation of risk factors. It may be that for a well characterised safety concern that there are no areas which need investigating in which case "none" should be written in column 1 and the only proposed action will be "routine pharmacovigilance". Some areas may need more than one activity to characterise a safety concern with different activities having different objectives. If a specific questionnaire is planned for collecting structured data on a safety concern of special interest this is still considered to be routine but should be mentioned and a mock up provided in RMP annex 7. A requirement to report on a specific adverse drug reaction at defined intervals resulting from a previous evaluation (e.g. PSUR/PBER) will be considered as routine pharmacovigilance but should be detailed in the table against the specific safety concern. Outstanding additional pharmacovigilance activities should be detailed in section III.4.

<Name Safety concern 1>		
Areas requiring confirmation or further investigation	Proposed routine and additional PhV activities	Objectives
1		
2		
3 etc.		

<Name Safety concern 2 >etc.		
Areas requiring confirmation or further investigation	Proposed routine and additional PhV activities	Objectives
1		
2		
3 etc.		

III.2. Additional pharmacovigilance activities to assess effectiveness of risk minimisation measures

Where there are risk minimisation measures which require the use of non-routine pharmacovigilance activities to measure the effectiveness, details should be provided here.

Risk minimisation measure		
Component measured	Activity(ies)	Rationale
Component 1		
Component 2 etc.		

III.3. Studies and other activities completed since last update of Pharmacovigilance Plan

This is a summary of completed studies and/or activities since the last update of the Pharmacovigilance Plan. The concise study report should be provided in RMP annex 9.

Study/activity title	
Safety concern(s)/risk minimisation measure investigated	
Brief summary of results	
Implications	

III.4. Details of outstanding additional pharmacovigilance activities

These are additional pharmacovigilance activities that considered key to the benefit risk of the product, specific obligation or those that are conducted or financed by the MAH to address particular safety concerns. These activities may include trials or studies which may be on-going (e.g. from clinical trials where the activity would be to provide a report) or be planned where the activity is to conduct the study. This would include studies or activities requested by another Regulatory authority where the results are expected to provide information relevant to existing areas of uncertainty. Studies which have been specifically requested by the medicines authority of the Arab Country concerned (which are not conditions of the marketing authorisation) or which may be suggested by the MAH to investigate a safety concern should also be included here. Studies to measure the effectiveness of risk minimisation measures would be normally included here.

Table 10. Required additional pharmacovigilance activities

	Description of activity (or study title if known)	**Milestone(s)**	**Due Date(s)**
1		1.(e.g. protocol submission)	<Enter a date>
		2.(e.g. study start)	<Enter a date>
		3.(e.g. study finish)	<Enter a date>
		4. (e.g. final report)	<Enter a date>
2 etc.		1.(e.g. protocol submission)	<Enter a date>
		2.(e.g. study start)	<Enter a date>
		3.(e.g. study finish)	<Enter a date>
		4. (e.g. final report)	<Enter a date>

III.5. Summary of the Pharmacovigilance Plan

III.5.1. Table of on-going and planned additional PhV studies/activities in the Pharmacovigilance (development) Plan

This should be a complete overview of all on-going and planned studies in the pharmacovigilance plan.

Study/activity Type, title and	**Objectives**	**Safety concerns addressed**	**Status (planned, started)**	**Date for submission of interim or final reports (planned or actual)**
<E.g. CRUCIAL Cancer Registry at University College Liver unit (non-interventional cohort, 3)>	<E.g. To investigate long term survival, time to progression, safety profile and QoL in patients with primary liver cancer or solid tumour metastases>	<E.g. Bradycardia, thrombosis, leukopenia, use in patients with renal impairment, long term safety>	<E.g. Protocol submitted to <<authority name>>	<E.g. Interim reports planned June 2014, 2017. Final study report Dec 2020>
<E.g. Validation of antibody test (non-clinical, 3)>	<E.g. Comparison of Supertest kit with current gold standard>	<E.g. Development of antibodies>	<E.g. Planned start March 2014>	<E.g. Final study report December 2014>

III.5.2. Table of completed studies/activities from the Pharmacovigilance Plan

This should be a complete overview of all completed studies in the pharmacovigilance plan.

Study/activity Type, title and	**Objectives**	**Safety concerns addressed**	**Status (Completed)**	**Date of submission of final study report**
<E.g.ABC-124 (randomised controlled trial, 3)>	<E.g. Compare time to disease progression with 3 different doses of Compare safety profile of different doses>	<E.g. Bradycardia, development of antibodies, Use in patients with renal impairment.>	<E.g. Completed. Final study report submitted>	<E.g. Final study report submitted 31st March 2013>

Part IV: Plans for post-authorisation efficacy studies

(May only be required if reference product has imposed post-authorisation efficacy studies or the concerned generic product has imposed additional post-authorisation efficacy studies)

(Please note that IV.1 "Applicability of efficacy to all patients in the target population" is omitted in this abridged RMP, do NOT change the numbering of the following sections.)

IV.2. Tables of post-authorisation efficacy studies

The MAH/Applicant should list any post authorisation efficacy studies which are proposed by the MAH/Applicant in relation to the above and also include those studies which have been imposed by the medicines authority in the Arab Country concerned or which are Specific Obligations. A synopsis of the protocols should be provided in Annex 8.

Table 11. Efficacy studies which are specific obligations (see footnote 2 & 3) and/or conditions of the MA

Description of study (including objectives and study number)	**Milestone(s)**	**Due Date(s)**
	1.(e.g. protocol submission)	<Enter a date>
	2.(e.g. study start)	<Enter a date>
	3.(e.g. study finish)	<Enter a date>
	4. (e.g. final report)	<Enter a date>

Table 12. Other efficacy/effectiveness studies

Description of study (including objectives and study number)	**Milestone(s)**	**Due Date(s)**
	1.(e.g. protocol submission)	<Enter a date>
	2.(e.g. study start)	<Enter a date>
	3.(e.g. study finish)	<Enter a date>
	4. (e.g. final report)	<Enter a date>

IV.3. Summary of post authorisation efficacy development plan

This should be a complete overview of all studies (on-going, planned)

Study (type and study number)	Objectives	Efficacy uncertainties addressed	Status (planned, started)	Date for submission of interim or final reports

IV.4. Summary of completed post authorisation efficacy studies

Study (type and study number)	Objectives	Efficacy uncertainties addressed	Status (Completed, Study report submitted)	Date of submission of final study report

Part V: Risk minimisation measures

Each safety concern identified in module SVIII "summary of the safety specification" should be addressed. If no risk minimisation measures are proposed, then "none proposed" should be entered against the objective.

If several components make up one risk minimisation measure (e.g. a pregnancy prevention plan may have educational material for health care professionals and patients, algorithms for deciding on child-bearing potential, patient reminder cards etc.) these should be grouped together.

For each safety concern, provide details of what criteria will be used to judge whether risk minimisation measures are a success e.g. fewer than 2 pregnancy reports in period y, no cases of liver failure reported, drug utilisation study showing <5% off-label use etc.

Further guidance on risk minimisation measures can be found in GVP Module XVI and CIOMS IX.

V.1. Risk minimisation measures by safety concern

Safety concern	
Objective(s) of the risk minimisation measures	
Routine risk minimisation measures	(Proposed) text in SmPC <E.g. Dose reduction for ……. in section 4.2 of the SPC…… Warning in section 4.4 to…… Listed in section 4.8>
	Comment (e.g. on any differences between SmPCs)
	Other routine risk minimisation measures <E.g. Prescription only medicine Use restricted to physicians experienced in the treatment of…….>
Additional risk minimisation measure(s)1	Objective and justification of why needed.
	Proposed actions/components and rationale
Additional risk minimisation measure(s) 2 (repeat as necessary)	Objective and justification of why needed.
	Proposed actions/components and rationale

Effectiveness of risk minimisation measures	
How effectiveness of risk minimisation measures for the safety concern will be measured	*If a study is planned, this should also be included in Part III.2 Additional PhV activities to assess effectiveness of risk minimisation measures*
Criteria for judging the success of the proposed risk minimisation measures	
Planned dates for assessment	
Results of effectiveness measurement	Provide latest assessment at each update of the RMP. For risk minimisation measures where formal studies are planned, any results should be mentioned in Part III.2 with the implications discussed here and any remedial actions in V.2
Impact of risk minimisation	
Comment	

V.2. Risk minimisation measure failure (if applicable)

List the safety concerns and risk minimisation measures which are judged to have failed.. If not applicable do NOT omit the section instead state that "No risk minimisation measure failures"

Safety concern	**Risk minimisation measure**

V.2.1. Analysis of risk minimisation measure(s) failure

When risk minimisation measures for a safety concern are thought to be inadequate, a root cause analysis of where it is failing should be undertaken

Safety concern	
Risk minimisation measure(s)	
Component 1	Analysis
Component 2 etc.	Analysis
Discussion	

V.2.2. Revised proposal for risk minimisation

Based on the analysis of why the risk minimisation activities were inadequate, a proposal should be made for new (or revised) risk minimisation measures for the safety concern

Safety concern	
Objective(s) of the risk minimisation activities	
Routine risk minimisation activities	Synopsis of (proposed) text in SmPC
	Comment (e.g. on any differences between SmPCs)
	Other routine risk minimisation activities
Additional risk minimisation measure(s) (repeat as necessary)	Objective and justification of why needed.
	Proposed actions/components and rationale
Comment on how revised proposals will address failings	
Effectiveness of risk minimisation measures	
How effectiveness of risk minimisation measures for the safety concern will be measured	*If a study is planned, this should also be included in Part III: Additional PhV activities to assess effectiveness of risk minimisation measures*
Criteria for judging the success of the proposed risk minimisation measures	

V.3. Summary table of risk minimisation measures

Safety concern	**Routine risk minimisation measures**	**Additional risk minimisation measures**
	From V.1 "proposed text in SmPC" and "other routine risk minimisation measures"	From V.1 (list)
	<E.g. Dose reduction for ……. in section 4.2 of the SPC…… Warning in section 4.4 to…… Listed in section 4.8 Prescription only medicine Use restricted to physicians experienced in the treatment of……>	

Part VI: Summary of the risk management plan by product

A separate RMP Part VI should be provided for each product in the RMP.

VI.1. Summary of Safety concerns

Copy table from Part II: SVIII

Summary of safety concerns	
Important identified risks	<> List
Important potential risks	<> List
Missing information	<> List

In addition to the listing of the safety concerns in the above table; each safety concern should be briefly described using the following tables.

Important identified risks

Risk	**What is known**	**Preventability**
<Safety concern in medical term>	<Brief summary>	<Whether risk can be minimised or mitigated, and how>
<E.g. peripheral neuropathy>	<E.g. Approximately one in two people treated with x will experience some form of peripheral neuropathy which may increase to three out of four people after 12 months of treatment. The peripheral neuropathy varies from mild tingling and altered sensation to irreversible disabling damage in the most severe cases. Early symptoms usually resolve or improve upon dose adjustment or discontinuation of therapy. >	<E.g. Yes, by monitoring for early symptoms >
<E.g. thromboembolic events {TEE}>	<E.g. These may affect the arteries or veins. In the veins this may lead to a painful swelling of the legs (deep vein thrombosis) and very occasionally life threatening or fatal clots in the lungs. Clots in the arteries may lead to a heart attack or stroke – particularly in patients who already have problems with their arteries. Patients with cancer who are being treated with oestrogen are already at higher risk of thromboembolic events so it is difficult to assess what extra risk is caused by x.>	<E.g. Yes with preventative anti-thrombotic medicines >

Important potential risks

Risk	What is known (Including reason why it is considered a potential risk)
<E.g. Secondary primary cancers>	<E.g. Patients treated with X may be at an increased risk of developing new cancers. There are theoretical mechanisms and more patients treated with X developed new cancers than those not treated with X, but this could also be due to the fact that they live longer.>

Missing information

Risk	What is known
<E.g. Limited information on use in patients with renal impairment>	<E.g. X itself is not eliminated to any significant extent by the kidney so it is unlikely that renal impairment will lead to problems. Some of its metabolites are eliminated by the kidney so it is recommended that patients with severe renal impairment are monitored carefully. >

VI.2. Summary of Risk Minimisation Measures by safety concern

Copy table V.3 from Part V

Safety concern	Routine risk minimisation measures	Additional risk minimisation measures

VI.3. Planned Post authorisation development plan

From combined summary tables in Part III. 5.1. and Part IV.3

1. List of studies in post authorisation development plan

Study /activity (type and study number)	Objectives	Safety concerns/ efficacy issue addressed	Status	Planned date for submission of (interim and) final results

2. Studies which are a condition of the marketing authorisation

<None of the above studies are conditions of the marketing authorisation>

< <study(ies)> <is><are> <a> condition<s> of the marketing authorisation

Mention all studies in the table (including specific obligations) which are conditions of the MA.

VI.4. Summary of changes to the Risk Management Plan over time

Major changes to the Risk Management Plan over time

Version	Date	Safety Concerns	Comment
	At time of authorisation dd/mm/yyyy	Identified Risks Potential Risks Missing information	
<E.g. 7.0>	<E.g. 17/08/2014>	<E.g.Allergic conditions added as an identified risk Hypersensitivity removed as an identified risk Severe infection added as an identified risk Convulsions added as a potential risk>	<E.g. The previous term hypersensitivity was updated to allergic conditions to include angioedema and urticarial>

Part VII: RMP Annexes

Provide here a list of the RMP annexes

List of annexes

Annex 1 – "National Pharmacovigilance and Safety reports database"/"National Pharmacovigilance Issues Tracking Tool" Interface

Annex 2 - SmPC & Package Leaflet

Annex 3 - Worldwide marketing authorisation by country (including Arab Country(s) concerned)

Annex 4 - Synopsis of on-going and completed clinical trial programme

Annex 5 - Synopsis of on-going and completed pharmacoepidemiological study programme

Annex 6 - Protocols for proposed and on-going studies in the section "Summary table of additional pharmacovigilance activities" in RMP Part III

Annex 7 - Specific adverse event follow-up forms

Annex 8 - Protocols for proposed and on-going studies in RMP Part IV

Annex 9 - Newly available study reports for RMP Parts III & IV

Annex 10 - Details of proposed additional risk minimisation measures (if applicable)

Annex 11 - Mock-up of proposed additional risk minimisation measures (if applicable)

Annex 12 - Other supporting data (including referenced material)

RMP Annex 1 – "National Pharmacovigilance and Safety reports database"/"National Pharmacovigilance Issues Tracking Tool" Interface

Available in electronic format only

Applicable only in some Arab Countries hence this annex should be submitted only upon request from the medicines authority of the Arab Countries concerned. Further details will be announced by authorities who require such annex.

*In Arab Countries who do not require this annex, it should be omitted (**WITHOUT** changing the numbering of the following annexes).*

RMP Annex 2 - SmPC & Package Leaflet

Current (or proposed if product is not authorised) local(of the concerned Arab Country) summary of product characteristics (SmPC) and package leaflet(s) for each product in the RMP.

If multiple versions are included for a product, they should show in which Country(s) they are applicable. In addition, if available, a core SmPC should be provided with an overview of the changes applicable to the SmPC in the Arab Country concerned.

RMP Annex 3 - Worldwide marketing authorisation by country (including Arab Country(s) concerned)

For each product in the RMP provide:

A3.1 Licensing status in the Arab Country(s) concerned

Country	Current licence status	Date of licence action *	Date first marketed in country	Current marketing status	Trade name(s)	Comments
	Choose one of the following: • Approved • Refused • Under review • Suspended • Expired • Withdrawn	<Enter a date>	<Enter a date>	Choose one of the following: • Marketed • Not marketed (if not marketed specify the date withdrawn from market)		If product has different routes of authorisation e.g. national + MRP in the EEA, note here which one applies

* Enter the date of the most recent change to the licence status: eg date of approval or date of suspension

A3.2 Licensing status in the rest of the world

Country	Current licence status	Date of licence action [1]	Date first marketed in country	Current marketing status	Trade name(s)	Comments
	Choose one of the following: • Approved • Refused • Under review • Suspended • Expired • Withdrawn	<Enter a date>	<Enter a date>	Choose one of the following: • Marketed • Not marketed (if not marketed specify the date withdrawn from market)		If product has different routes of authorisation e.g. national + MRP in the EEA, note here which one applies

RMP Annex 4 - Synopsis of on-going and completed clinical trial programme

Study	**Description (Phase, short description of study (1 – 2 sentences including comparator name(s)/placebo))**	**Countries**	**Study design**	**Planned/actual number of patients**	**Duration of follow up**	**Estimated/Actual completion date**
Main or pivotal studies						
<E.g. Study ABC>	<E.g. Study versus ibuprofen in adults with mild postoperative pain Phase III>	<E.g. Germany, USA, Chile, Egypt>	<E.g. Randomised double-blind>	<E.g. 4075>	<E.g. 14 days>	<E.g. Jan 2005>
Further safety/efficacy studies						
Studies in special populations (e.g. paediatric, elderly)						

RMP Annex 5 - Synopsis of on-going and completed pharmacoepidemiological study programme

Study	Research question	Study design	Population & study size	Duration of follow up	Milestones & dates	Status
						Choose one of the following: • Planned • Protocol under development • Protocol agreed • Data collection started • Data collection ended • Study completed

RMP Annex 6 - Protocols for proposed and on-going studies in the section "Summary table of additional pharmacovigilance activities" in RMP part III

Overview of included protocols

Study title	Protocol status *	Version of protocol	Date of protocol version
	Choose one of the following: • Draft • Approved		<Enter a date>

*Draft = not approved

Approved = when agreed by national authority as appropriate

RMP Annex 7 - Specific adverse event follow-up forms

Provide forms

RMP Annex 8 - Protocols for proposed and on-going studies in RMP part IV

Study title	Protocol status *	Version of protocol	Date of protocol version
	Choose one of the following: • Draft • Approved		<Enter a date>

*Draft = not approved

Approved = when agreed by Authority

RMP Annex 9 - Newly available study reports for RMP parts III & IV

Include the study abstract. For non-interventional studies use the abstract format detailed in Module: VIII Post Authorisation Safety Studies of Good Pharmacovigilance Safety Studies

RMP Annex 10 - Details of proposed additional risk minimisation measures (if applicable)

RMP Annex 11 - Mock-up of proposed additional risk minimisation measures (if applicable)

Mock up examples in English (unless other language is requested by the medicines authority of the Arab Country concerned) (of the material provided to healthcare professionals and patients. For those materials directed to patients, in addition to the English version, Arabic translation of the mock up shall be included as well..

RMP Annex 12 - Other supporting data (including referenced material)

Index of included material

Annex II.3. Template of the National Display of the Risk Management Plan (RMP) in the Arab Countries - for MAH/Applicant having Eu RMP (Rev.1)

Active substance(s) (INN or common name):	
Pharmaco-therapeutic group (ATC Code):	
Name of Marketing Authorisation Holder or Applicant:	
Name of the pharmacovigilance representative (if applicable)	
Number of medicinal products to which this National display of RMP refers (i.e. number in the Arab Country concerned):	Choose one of the following: 1 2 3 4 5 6
Product(s) concerned (brand name(s)):	<list>

Version number of National Display < Enter a version no >

Date of final sign off <Enter a date>

For the EU RMP which is the reference of this National Display (referenced EU RMP):

Version number <Enter a version no>

Table of content of National Display of the RMP

Provide here the table of content of the National display of RMP and its annexes (hyperlink) as showing the page number

Section I: Product(s) Overview .....

Section II: Summary table of Safety concerns .....

Section III: Summary of the Risk Management Plan by activity .....

III.1 Activities included in the referenced EU RMP.....

III.2 Supplementary activities on the national level .....

a) Supplementary national pharmacovigilance activity(s) .....

b) Supplementary national post-authorisation efficacy study(s) .....

c) Supplementary national risk minimisation activity(s).....

Section IV: National Display of RMP Annexes .....

Annex 1 – should submitted only upon request of the Arab Country concerned .....

Annex 2 - SmPC & Package Leaflet.....

Annex 6 - Protocols for for proposed & ongoing supplementary additional pharmacovigilance activities in National Display of RMP section III.2.a .....

Annex 7 - Specific adverse event follow-up forms section III. 2.a .....

Annex 8 - Protocols for proposed and ongoing studies in National Display of RMP section III.2.b .....

Annex 9 - synopsis of newly available study reports in National display Section III.2.a. & b. .....

Annex 10 - Details of proposed additional risk minimisation measures (if applicable) .....

Annex 11 - Mock-up of proposed additional risk minimisation measures (if applicable).....

Annex 12 - Other supporting data (including referenced material).....

Risk management is a global activity. However, because of differences in indication and healthcare systems, target populations may be different across the world and risk minimisation activities will need to ***be tailored*** *to the system in place in a particular country or global region. In addition, differences in disease prevalence and severity, for example, may mean that the benefits of a medicinal product may also vary between regions. Therefore a product may* ***need different or supplementary activities in the RMP*** *for each region although there will be core elements which are common to all. For example much of the safety specification will be the same regardless of where the medicinal product is being used but the epidemiology of the disease may vary between e.g. Africa and Europe, and there may be* ***additional or fewer safety concerns*** *depending upon the target population and indication.*

Furthermore, individual countries may have different health systems and medical practice may differ between countries so the conditions and restrictions in the marketing authorisation may be implemented in different ways depending upon national customs.

MAH/ Applicants are required to submit RMP to the medicines authority of the Arab Country concerned in the situations described in Module V section V.C.3.

Taking into consideration that the core elements of the product's RMP are common and as this guideline was based on the European Good Pharmacovigilance Practice, thus for simplification; MAH/Applicants having EU RMP in place submit both of the following:

1. *the most updated version of the EU RMP (referenced EU RMP including its annexes); altogether with*
2. *the National Display of the RMP (including its annexes).*

In these circumstances (submitting the National Display and the EU RMP), the following conditions apply:

- *When the referenced EU RMP is subject to update the National Display of RMP should be updated in accordance.*
- *Minor differences may exist between this guidance and the EU RMP, in this case MAH/Applicant may be asked by the national medicines authority in the Arab Country concerned to submit additional information, use different tables, and/or provide clarification….etc.*
- *The submitted EU RMP shall be the most updated version.*
- *The EU RMP shall be submitted with its annexes and reference materials*
- *Generally, it is required that all the risk management activities applied globally/in the EU to be applied in the concerned Arab Country as well, especially the risk minimization measures including the measurement of their effectiveness. Accordingly, all activities, action plans and details especially the risk minimization ones (including the measurement of their effectiveness) stated in the submitted EU RMP are expected by default to apply to Arab Country concerned and the MAH is required to adhere to them, EXCEPT otherwise clearly stated and justified by the MAH/Applicant in the "National Display of the RMP" and agreed by the national medicines authority. Please pay attention in filling in the National Display of RMP and do not skip any activity which was in the reference EU RMP without highlighting whether it will be implemented or not on the national level according to the tables below. Any unjustifiably*

skipped activity will be considered as "apply to national level" and the MAH is required to adhere to.

The purpose of the "National Display of the RMP" is:

- *to highlight to what extent the risk management activities proposed to be implemented nationally adhere to the globally implemented plan and;*
- *to provide justification for any difference (apart from what implemented in EU) whenever exist including the needed national tailoring if any.*
- *In addition it should include an assessment whether there are any additional national/ region-specific risks or not, describing the may be added activities to manage those additional risks.*
- *It provides good evidence that the LSR has clear understanding and commitment about the activities that will be implemented on the national level and how they will be implemented.*

Contacts

Local Safety Responsible (LSR) name ……

LSR signature .....…….....……...……

Contact person for this RMP …….....……

E-mail address or telephone number of contact person …….....……

…….....

Section I: Product(s) Overview

For each product in the RMP

Indication(s)	Current (if applicable) **in the Arab Country concerned**
	Current of the medicinal product in the EEA
	Proposed (if applicable) **in the Arab Country concerned**
	That of the medicinal product in the EEA
Posology and route of administration in the Arab Country concerned	Current (if applicable) **in the Arab Country concerned**
	Current of the reference medicinal product in the EEA
	Proposed (if applicable) **in the Arab Country concerned**
	That of the reference medicinal product in the EEA
Pharmaceutical form(s) and strengths	Current (if applicable) **in the Arab Country concerned**
	Current of the reference medicinal product in the EEA
	Proposed (if applicable) **in the Arab Country concerned**
	That of the reference medicinal product in the EEA

Date of first authorisation (if authorised) in the Arab Country concerned <Enter a date>

Section II: Summary table of Safety concerns

Copy table from Part II: SVIII of the referenced EU RMP and add to the list any risk which may be specific to the region or the Arab Country concerned (to which this display will be submitted).

Summary of safety concerns	
Important identified risks	• < > List • Arab Country concerned/ region-specific risk (if any): < > List
Important potential risks	• < > List • Arab Country concerned/ region-specific risk (if any): < > List
Missing information	• < > List • Arab Country concerned/ region-specific risk (if any): < > List

Section III: Summary of the Risk Management Plan by activity

III.1. Activities included in the referenced EU RMP

The following table should summarise all the activities stated in the referenced EU RMP, separate table for each medicinal product included in the National Display of RMP may be provided as appropriate. It should be organized **in terms of the activities/actions** to be undertaken rather than by safety concern. The reason for this is that one proposed activity (e.g. a prospective safety cohort study) could address more than one of the safety concerns.

All the activities of the following types should be covered in the table; in addition indicate the corresponding type in the second column:

- routine pharmacovigilance activities,
- ongoing & planned additional pharmacovigilance activities,
- ongoing & planned post authorisation efficacy studies
- routine risk minimisation measures
- additional risk minimisation measures

Those activities as stated in the referenced EU RMP should be displayed in comparison with those proposed by the MAH/Applicant to be implemented in the Arab Country concerned (i.e. on the national level); any difference should be clearly justified. Ideally the following **activity comparison table** can be used to present the needed data.

Activities as stated in the referenced EU RMP	Type of the activity	Safety Concern/ efficacy issue	Action plan in the referenced EU RMP	Action plan in the National Display of the RMP	Highlight differences if any (even minor difference)	Justification

a) If the MAH/Applicant proposes **not to implement** in Arab Country concerned any of the **activities** stated in the EU referenced RMP; this should be clearly highlighted in the above table and comprehensive justification should be supplied, in addition explanation of how the safety concern intended by this activity will then be managed in Arab Country concerned.

b) If the MAH/Applicant proposes some differences (even minor ones) in the action plan of **specific activity** to be followed in the Arab Country concerned other than those described in the referenced EU RMP; the differences should be clearly highlighted in the table and comprehensive justification should be supplied as well.

III.2. Supplementary activities on the national level

If the MAH/Applicant will implement in the Arab Country concerned additional activities over those stated in the referenced EU RMP (e.g. due to country-specific/region-specific safety concern/s or due to other justified reason); this should be presented in details according to the below tables (for details see Module V parts III and V), as appropriate **any relevant documents should be annexed**. It is also important to realize that for activities already exist in the referenced EU RMP but different action plan in the Arab Country concerned is proposed by MAH/Applicant this action plan cannot be included in this section as if it is plan for additional activity, instead the difference should be described in the above table.

a) Supplementary national pharmacovigilance activity(s)

If the supplementary activity is a specific questionnaire is planned for collecting structured data on a safety concern of special interest on the national level this is still considered to be routine but should be mentioned and a mock up provided in this National Display of RMP annex 7. If the supplementary activity(s) is of additional pharmacovigilance type (i.e. additional

pharmacovigilance activity); fill in the following table, and protocols should be provided in Annex 6 of this National Display of RMP.

Study/activity Type, title	**Objectives**	**Safety concerns addressed (country/region specific)**	**Status (planned, started)**	**Date for submission of interim or final reports (planned or actual)**
<E.g. CRUCIAL Cancer Registry at University College Liver unit (non-interventional cohort,)>	<E.g. To investigate long term survival, time to progression, safety profile and QoL in patients with primary liver cancer or solid tumour metastases>	<E.g. Bradycardia, thrombosis, leukopenia, use in patients with renal impairment, long term safety>	<E.g. Protocol submitted to <<authority name>>	<E.g. Interim reports planned June 2014& 2017. Final study report Dec 2020>
<E.g. Validation of antibody test (non-clinical,>	<E.g. Comparison of Supertest kit with current gold standard>	<E.g. Development of antibodies>	<E.g. Planned start March 2014>	<E.g. Final study report December 2014>

b) Supplementary national post-authorisation efficacy study(s)

If the supplementary activity(s) is a post-authorisation study fill in the following table. The protocols should be provided in Annex 8 of this National Display of RMP.

Study (type and study number)	**Objectives**	**Efficacy uncertainties addressed**	**Status (planned, started)**	**Date for submission of interim or final reports**

c) Supplementary national risk minimisation activity(s)

If the supplementary activity(s) is of risk minimisation type (i.e. risk minimisation activity); fill in the following tables. Details should be provided in Annexes 10 & 11 of this National display of RMP.

Safety concern	
Objective(s) of the risk minimisation measures	
Routine risk minimisation measures	(Proposed) text in SmPC <E.g. Dose reduction for ……. in section 4.2 of the SPC…… Warning in section 4.4 to…… Listed in section 4.8>
	Comment (e.g. on any differences between SmPCs)
	Other routine risk minimisation measures <E.g. Prescription only medicine Use restricted to physicians experienced in the treatment of…….>
Additional risk minimisation measure(s)1	Objective and justification of why needed.
	Proposed actions/components and rationale
Additional risk minimisation measure(s) 2 (repeat as necessary)	Objective and justification of why needed.
	Proposed actions/components and rationale

Effectiveness of risk minimisation measures	
How effectiveness of risk minimisation measures for the safety concern will be measured	*If a study is planned, this should also be included in Part III.2 Additional PhV activities to assess effectiveness of risk minimisation measures*
Criteria for judging the success of the proposed risk minimisation measures	
Planned dates for assessment	
Results of effectiveness measurement	Provide latest assessment at each update of the RMP. For risk minimisation measures where formal studies are planned, any results should be mentioned in Part III.2 with the implications discussed here and any remedial actions in V.2
Impact of risk minimisation	
Comment	

Section IV: National Display of RMP Annexes

Provide here a list of the annexes of the National Display of the RMP

List of annexes of the National Display of RMP

Annex 1 – should submitted only upon request of the Arab Country concerned

Annex 2 - SmPC & Package Leaflet

Annex 3 - N.A. (submitted already in the referenced EU RMP)

Annex 4 - N.A. (submitted already in the referenced EU RMP)

Annex 5 - N.A. (submitted already in the referenced EU RMP)

Annex 6 - Protocols for proposed & ongoing supplementary additional pharmacovigilance activities in National Display of RMP section III.2.a (if applicable)

Annex 7 - Specific adverse event follow-up forms section III. 2.a (if applicable)

Annex 8 - Protocols for proposed and ongoing studies in National Display of RMP section III.2.b (if applicable)

Annex 9 - Synopsis of newly available study reports in National display Section III.2.a. & b.

Annex 10 - Details of proposed additional risk minimisation measures (if applicable)

Annex 11 - Mock-up of proposed additional risk minimisation measures (if applicable)

Annex 12 - Other supporting data (including referenced material)

Annex 2 - SmPC & Package Leaflet

Current (or proposed if product is not authorised) local (of the concerned Arab Country) summary of product characteristics (SmPC) and package leaflet(s) for each product in the RMP.

If multiple versions are included for a product, they should show in which Country(s) they are applicable. In addition, if available, a core SmPC should be provided with an overview of the changes applicable to the SmPC in the Arab Country concerned.

Annex 6 - Protocols for proposed & ongoing supplementary additional pharmacovigilance activities in National Display of RMP section III.2.a

Overview of included protocols

Study title	Protocol status *	Version of protocol	Date of protocol version
	Choose one of the following: • Draft • Approved		<Enter a date>

*Draft = not approved

Approved = when agreed by national authority as appropriate

Annex 7 - Specific adverse event follow-up forms section III. 2.a

Provide forms

Annex 8 - Protocols for proposed and ongoing studies in National Display of RMP section III.2.b

Study title	Protocol status *	Version of protocol	Date of protocol version
	Choose one of the following: • Draft • Approved		<Enter a date>

*Draft = not approved

Approved = when agreed by Authority

Annex 9 - Synopsis of newly available study reports in National display Section III.2.a. & b.

Include the study abstract. For non-interventional studies use the abstract format detailed in Module: VIII Post Authorisation Safety Studies of Good Pharmacovigilance Safety Studies

Annex 10 - Details of proposed additional risk minimisation measures (if applicable)

Annex 11 - Mock-up of proposed additional risk minimisation measures (if applicable)

Mock up examples in English (unless other language is requested by the medicines authority of the Arab Country concerned) (of the material provided to healthcare professionals and patients. For those materials directed to patients, in addition to the English version, Arabic translation of the mock up shall be included as well.

Annex 12 - Other supporting data (including referenced material)

Index of included material with regard to the National Display of RMP

Annex II.4. Templates: Cover page of periodic safety update report (PSUR)

PERIODIC SAFETY UPDATE REPORT

for

ACTIVE SUBSTANCE(S): <INN>

ATC CODE(S): <Code(s)>

MEDICINAL PRODUCTS COVERED:

Invented name of the medicinal product(s)	Marketing authorisation number(s)	Date(s) of authorisation *(Underline the International Birth Date)*	Marketing authorisation holder
<>	<>	<>	<>
<>	<>	<>	<>

INTERNATIONAL BIRTH DATE (IBD): <Date>

EUROPEAN UNION REFERENCE DATE (EURD): <Date>

INTERVAL COVERED BY THIS REPORT:
From <date> to <date (i.e. data lock point)>
DATE OF THIS REPORT:
<Date>

OTHER INFORMATION:

<Other identifying or clarifying information if necessary>

MARKETING AUTHORISATION HOLDER'S NAME AND ADDRESS:

<Name>
<Address>
<E-mail address> **(contact person for the PSUR procedure)**

NAME AND CONTACT DETAILS OF THE QPPV:

<Name>
<Address>
<Telephone number>
<Fax number>
<E-mail address>
SIGNATURE (QPPV or designated person): <Signature>

Annex II.5. Templates: Direct healthcare-professional communication (DHPC)

<Date>

<Active substance, name of medicinal product and main message *(e.g. introduction of a warning or a contraindication)>*

Dear Healthcare professional,

<Name of marketing authorisation holder> would like to inform you of the following:

Summary

Style guide: This section should be in larger font size than the other sections of the DHPC and preferably in bullet points.

- <Brief description of the safety concern, recommendations for risk minimisation *(e.g. contraindications, warnings, precautions of use)* and, if applicable, switch to alternative treatment>
- <Recall information, if applicable, including level (pharmacy or patient) and date of recall>

<A statement indicating that the information is being sent in agreement with the national medicines authority, if applicable>

Further information on the safety concern and the recommendations

<Important details about the safety concern (adverse reaction, seriousness, statement on the suspected causal relationship, and, if known, the pharmacodynamic mechanism, temporal relationship, positive re-challenge or de-challenge, risk factors), also the reason for disseminating the DHPC at this point in time>

<An estimation of the frequency of the adverse reaction or reporting rates with estimated patient exposure>

<A statement indicating any association between the adverse reaction and off-label use, if applicable>

<If applicable, details on the recommendations for risk minimisation>

<Placing of the risk in the context of the benefit>

<A statement on any previous DHPCs related to the current safety concern that have recently been distributed>

<A schedule for follow-up action(s) by the marketing authorisation holder/national medicines authority, if applicable>

Further information

<Link/reference to other available relevant information, such as information on the website of a national medicines authority>

<Therapeutic indication of the medicinal product, if not mentioned above>

Call for reporting

<A reminder of the need and how to report adverse reactions in accordance with the national spontaneous reporting system>

<Mention if product is subject to additional monitoring and the reason why>

<Details *(e.g. name, postal address, fax number, website address)* on how to access the national spontaneous reporting system>

Company contact point

<Contact point details for access to further information, including relevant website address(es), telephone numbers and a postal address>

Annexes

<Relevant sections of the Product Information that have been revised (with changes made visible)>

<Detailed scientific information, if necessary>

<List of literature references, if applicable>

GVP: Annexes

Annex III – Other pharmacovigilance guidance

The following are other guidelines developed by the European Medicines Agency (EMA) some of them are under their previous EU regulations but remain valid in principle (unless any aspect is not compatible with this guideline). These guidelines are acknowledged –from scientific aspects- in the Arab Countries, they may be revised at a later point in time for inclusion in GVP for Arab Countries.

Guideline name	Organisation
▪ Guideline on the exposure to medicinal products during pregnancy: Need for post-authorisation data	European Medicines Agency (EMA)
▪ Guideline on conduct of pharmacovigilance for medicines used by the paediatric population	EMA
▪ Guideline on the Detection and Management of Duplicate Individual Cases and Individual Case Safety Reports (ICSRs)	EMA
▪ Guideline on Safety and Efficacy Follow-up – Risk Management of Advanced Therapy Medicinal Products	EMA
▪ Guidance for the format and content of the final study report of non-interventional post-authorisation safety studies	EMA
▪ Guidance for the format and content of the protocol of non-interventional post-authorisation safety studies	EMA
▪ Checklist for Study Protocols	European Network of Centres for pharmacoepidemiology & pharmacovigilance (ENCePP)
▪ ENCePP Guide on Methodological Standards in Pharmacoepidemiology	

Guideline name	Organisation
▪ Systematic overview of data sources for drug safety in pregnancy research	ENCePP
▪ Definition and application of terms of vaccine pharmacovigilance (report of CIOMS/WHO Working Group on Vaccine Pharmacovigilance). Genève: CIOMS; 2012	CIOMS /WHO
▪ Guideline on Clinical Development of Vaccines (EMEA/CHMP/VWP/164653/2005)	EMA
▪ Brighton Collaboration case definitions	Brighton Collaboration
▪ Development and rational use of Standardised MedDRA Queries (SMQs). Geneva: CIOMS; 2004	CIOMS

GVP: Annexes

Annex IV – International Conference on Harmonisation of Technical Requirements for Registration of Pharmaceuticals for Human Use (ICH) guidelines for pharmacovigilance

List of relevant ICH guidelines

Document(s)	First published	Last updated
International Conference on Harmonisation of Technical Requirements for Registration of Pharmaceuticals for Human Use topic E 2 A: Clinical safety data management: Definitions and standards for expedited reporting - Step 5	01/06/1995	
International Conference on Harmonisation of Technical Requirements for Registration of Pharmaceuticals for Human Use guideline E2B (R3): Electronic transmission of individual case safety reports (ICSRs) - data elements and message specification - implementation guide - Step 5 *	01/09/2005	27/08/2013
International Conference on Harmonisation of Technical Requirements for Registration of Pharmaceuticals for Human Use topic E 2 B (R5): Questions and answers: Data elements for transmission of individual case safety reports - Step 5	01/03/2005	12/01/2015
International Conference on Harmonisation of Technical Requirements for Registration of Pharmaceuticals for Human Use guideline E2C (R2) on periodic benefit-risk evaluation report - Step 5	31/12/2012	
International Conference on Harmonisation of Technical Requirements for Registration of Pharmaceuticals for Human Use topic E 2 D: Postapproval safety data management - Step 5	30/11/2003	
International Conference on Harmonisation of Technical Requirements for Registration of Pharmaceuticals for Human Use topic E 2 E: Pharmacovigilance planning - Step 5	31/12/2004	
International Conference on Harmonisation of Technical Requirements for Registration of Pharmaceuticals for Human Use guideline E2F on development safety update report - Step 5	30/09/2010	
ICH M1 Medical Dictionary for Regulatory Activites (MedDRA)		
MedDRA points-to-consider documents, i.e. ICH-Endorsed guide for		

Document(s)	First published	Last updated
MedDRA users and ICH-Endorsed guide for MedDRA users on data output		
ICH M2 electronic standards for the transfer of regulatory information (ESTRI)		
ICH M5 Data Elements and Standards for Drug Dictionaries		

* ICH E2B(R2): Maintenance of the ICH guideline on clinical safety-data management: Data elements for transmission of individual case safety reports. While the implementation of ICH-E2B(R3) is being prepared for, ICH-E2B(R2) remains the currently applicable format for transmission of individual case safety reports.

GVP: Annexes

Annex V- Abbreviations

Abbreviation	
ADR	Adverse drug reaction (preferred term: Adverse reaction)
AE	Adverse event
AEFI	Adverse event following immunisation
AESI	Adverse event of special interest
AR	Assessment report
ATC	Anatomical- therapeutic-chemical (in Anatomical Therapeutic Chemical Classification System)
ATMP	Advanced therapy medicinal product
CCDS	Company core data sheet
CCSI	Company core safety information
CIOMS	Council for International Organizations of Medical Sciences
COSO	Committee of Sponsoring Organizations of the Treadway Commission
DB	Database
DDPS	Detailed description of the pharmacovigilance system
DHPC	Direct healthcare professional communication
DIBD	Development international birth date
DLP	Data lock point
DSUR	Development safety update report
DUS	Drug utilisation study
eCTD	Electronic Common Technical Document
ENCePP	European Network of Centres for Pharmacoepidemiology and Pharmacovigilance
ESTRI	ICH electronic standards for the transfer of regulatory information
EU	European Union

Abbreviation	
EURD	EU reference date
GCP	Good clinical practice
GDP	Good distribution practice
GLP	Good laboratory practice
GMP	Good manufacturing practice
GPP	ISPE Guidelines for good pharmacoepidemiology practices
GVP	Good pharmacovigilance practices
HLT	High-level term (in MedDRA)
IBD	International birth date
ICH	International Conference on Harmonisation of Technical Requirements for Registration of Pharmaceuticals for Human Use
ICSR	Individual case safety report
IIA	Chartered Institute of Internal Auditors
IME	Important medical event
INN	International non-proprietary name
ISO	International Organization for Standardization
ISPE	International Society for Pharmacoepidemiology
IT	Information technology
LSR	Local Safety Responsible
MA	Marketing authorisation
MAH	Marketing authorisation holder
MedDRA	ICH Medical Dictionary for Regulatory Activities
NMA	National Medicines authority

Abbreviation	
NIMP	Non-investigational medicinal product
O/E	Observed-versus-expected analysis
P.	Product- or Population-Specific Considerations (in GVP)
PAES	Post-authorisation efficacy study
PAS	Post-authorisation study
PASS	Post-authorisation safety study
PBRER	Periodic benefit-risk evaluation report
PhV DB	Pharmacovigilance database
PL	Package leaflet
PSMF	Pharmacovigilance system master file
PSSF	Pharmacovigilance sub-system file (on national level)
PSUR	Periodic safety update report
PT	Preferred term (in MedDRA)
QPPV	Qualified person responsible for pharmacovigilance
RMP	Risk management plan
SmPC	Summary of product characteristics
SMQ	Standardised MedDRA query
SOC	System organ class (in MedDRA)
SUSAR	Suspected unexpected serious adverse reaction
UMC	Uppsala Monitoring Centre
URD	Union reference date (preferred term: EU reference date)
WHO	World Health Organization

أســس
الممــارسة الجيــدة لليقظــة الدوائيــة
بالــدول الـعربيــة

للمستحضرات الصيدليـة للاستخدام البشري

- أدلـة عـمل لحاملي الرخص التسويقيـة -

تاريخ النشرالأول: إبريل ٢٠١٤

تاريخ التفعيل الأول: ١ يوليو ٢٠١٥

نـسخة ٣ - ديسمبر ٢٠١٥

تحت رعاية
جـامعة الـدول العربيـة

أسـس الممـارسة الجيـدة للـيقظـة الدوائيـة

بالـدول الـعربيـة